SOLAR POWER BASED MULTIPURPOSE AGRI ROBOT USING ANDRIOD APPLICATION

A project report submitted in partial fulfillment of the requirements for the award of the Degree of

Bachelor of Technology

in

Electronics and Communication Engineering

by

A.PAVANI	**(204N1A0404)**
V.HARSHAVARDHAN	**(204N1A0458)**
B.THARUN KUMAR	**(204N1A0409)**
A.SRI LATHA	**(204N1A0403)**
R.MANEESHA	**(204N1A0444)**

Under the Guidance of

D M P KUMAR REDDY

Associate professor

Department of Electronics and Communication Engineering

VISVODAYA ENGINEERING COLLEGE :: KAVALI

(Affiliated to JNTUA, Anantapuramu & Approved by AICTE)

SPSR Nellore (Dt.), Andhra Pradesh – 524201

2024

SOLAR POWER BASED MULTIPURPOSE AGRI ROBOT USING ANDRIOD APPLICATION

A project report submitted in partial fulfillment of the requirements for the award of the Degree of

Bachelor of Technology

in

Electronics and Communication Engineering

by

A.PAVANI	**(204N1A0404)**
V.HARSHAVARDHAN	**(204N1A0458)**
B.THARUN KUMAR	**(204N1A0409)**
A.SRI LATHA	**(204N1A0403)**
R.MANEESHA	**(204N1A0444)**

Under the Guidance of

D M P KUMAR REDDY

Associate professor

Department of Electronics and Communication Engineering

VISVODAYA ENGINEERING COLLEGE :: KAVALI

(Affiliated to JNTUA, Anantapuramu & Approved by AICTE)

SPSR Nellore (Dt.), Andhra Pradesh – 524201

2024

Department of Electronics and Communication Engineering

VISVODAYA ENGINEERING COLLEGE :: KAVALI

CERTIFICATE

This is to certify that the project report titled **"SOLAR POWER BASED MULTIPURPOSE AGRI ROBOT USING ANDROID APPLICATION",** being submitted by

A. PAVANI	**(204N1A0404)**
V. HARSHAVARDHAN	**(204N1A0458)**
B. THARUN KUMAR	**(204N1A0409)**
A. SRI LATHA	**(204N1A0403)**
R.MANEESHA	**(204N1A0444)**

In partial fulfillment of the requirements for the award of the degree of *Bachelor of Technology in Electronics and Communication Engineering*, to the Jawaharlal Nehru Technological University Anantapuramu, Anantapuramu is a record of bonafide work carried out by them under my guidance and supervision.

Internal Guide	**Head of the Department**
Mr D M P KUMAR REDDY	**Mr M Ramesh Reddy,**
Associate professor,	**Assistant Professor,**
Dept. of ECE,	**Dept. of ECE,**
VEC.	**VEC.**

External Viva Voce conducted on_____

External Examiner

DECLARATION

We hereby declare that the project entitled, "**SOLAR POWER BASED MULTIPURPOSE AGRI ROBOT USING ANDROID APPLICATION**" completed and written by us, has not been previously submitted elsewhere for the award of any degree or diploma.

Place:

Date:

A. PAVANI	**(204N1A0404)**
V. HARSHAVARDHAN	**(204N1A0458)**
B. THARUN KUMAR	**(204N1A0409)**
A. SRI LATHA	**(204N1A0403)**
R.MANEESHA	**(204N1A0444)**

ACKNOWLEDGEMENTS

We consider it as our duty to express our gratitude to all those who guided, inspired and helped us in completion of this project work.

We acknowledge, with profound sense of gratitude, the guidance and support of our guide ***D M P KUMAR REDDY***, Associate professor, Department of Electronics and Communication Engineering, VEC, Kavali. His/ timely suggestions and co-operation, both professionally and personally, have greatly contributed in bringing out the project successfully.

We express our heart-felt thanks to ***MR M RAMESH REDDY***, Assistant Professor and Head of the Department of Electronics and Communication Engineering, VEC, Kavali, for his kind encouragement and for providing us with all required facilities for the completion of the project work.

We also express our gratitude to the principal ***Dr.T.SURESH BABU***, Professor, for providing necessary infrastructure & an ambient atmosphere to complete our project work.

We are indeed indebted to all our teachers who have guided us throughout our B.Tech course for the past four years and have imparted a sufficient knowledge and inspiration to take us forward in our career.

Finally, we thank each and everyone who has helped us directly and indirectly in completion of project work.

A. PAVANI	**(204N1A0404)**
V. HARSHAVARDHAN	**(204N1A0458)**
B. THARUN KUMAR	**(204N1A0409)**
A. SRI LATHA	**(204N1A0403)**
R.MANEESHA	**(204N1A0444)**

ABSTRACT

More than 40 percent of the population in the world chooses agriculture as the primary occupation. The main objective of the project is to design a multitasking vehicle for agriculture which could run automatically. It is designed to minimize the labour of farmers in addition to increase the speed and accuracy of the work. With innovation in every field of our lives, agricultural field also gets impacted by technological innovations on a huge scale. agriculture is backbone of India. In order to support this, a multi-functioning robot is required. Smart agriculture is implemented to save the manpower and time of work with help of multitasking. The main aim of the project is to provide the smart farming at low cost without compromising on the efficiency of the processes involved. The multitasking robot perform the ploughing, seed dispensing and water pumping to the fields using the Arduino UNO and Bluetooth terminal HC-05 module. This ensures the using eco-friendly energy source and prevents frequent charging of the vehicle.

Keywords: Agriculture robot, Ploughing, Seed despancer, Water sprinkling

TABLE OF CONTENTS

CHAPTER NO	CONTENTS	PAGE NO
	MAIN PAGE	**i**
	CERTIFICATE	**ii**
	DECLARATION	**iii**
	ACKNOWLEDGEMENTS	**iv**
	ABSTRACT	**v**
	CONTENTS	**vi-vii**
	LIST OF FIGURES	**viii-ix**
	LIST OF TABELS	**x**
CHAPTER 1	**INTRODUCTION**	**1**
	1.1 EMBEDDED SYSTEM	2
	1.2 EMBEDDED SYSTEM HARDWARE	3
	1.3 EMBEDDED SYSTEM SOFTWARE	3-4
	1.4 HISTORY AND FUTURE	4
	1.5 REAL TIME SYSTEMS	5
	1.6 APPLICATIONS	5
	1.7 APPLICATIONS AREAS	6-8
	1.8 LITERATURE SURVEY	9
CHAPTER 2	**EXISTING SYSTEM**	**10**
	2.1 MACHINES USED IN EXISTING SYSTEM	10

CHAPTER 3	**PROPOSED SYSTEM**	**11**
	3.1 OBJECTIVE OF PROPOSED SYSTEM	11
	3.2 BLOCK DIAGRAM	11-13
	3.3 CIRCUIT DIAGRAM	13
	3.4 FLOW CHART	14
	3.5 WORKING	15-17
	3.6 HARDWARE REQUIREMENTS	18-41
	3.7 SOFTWARE REQUIREMENTS	42-52
CHAPTER 4	**RESULTS AND DISCUSSIONS**	**53-54**
	4.1 ADVANTAGES	55
	4.2 APPLICATIONS	55
CHAPTER 5	**CONCLUSION AND FUTURE SCOPE**	**56**
	5.1 CONCLUSION	56
	5.2 FUTURE SCOPE	56
	REFERENCE	57

LIST OF FIGURES

Figure No	Title	Page No
Fig 1.1	Overview of Embedded System	2
Fig 1.2	Block Diagram of Embedded System	3
Fig 1.3	System Rom Embedding the Software, RTOS, Data and Vector Addresses	4
Fig 2.1 (a)	Water Pumping Machine	10
Fig 2.1 (b)	Ploughing Machine	10
Fig 2.1 (c)	Seed Dispenser	10
Fig 3.1	Block Diagram of The Agriculture Robot	11
Fig 3.2	Circuit Diagram of Proposed Method	13
Fig 3.3	Flow Chart	14
Fig 3.4	Robot moving forward direction	16
Fig 3.5	Start ploughing	17
Fig 3.6	Start seeding	17
Fig 3.7	Stop watering	17
Fig 3.8(a)	Arduino Uno	18
Fig 3.8(b)	Arduino Due	18
Fig 3.8(c)	Arduino Leonardo	18
Fig 3.8.(d)	Arduino Mega	18
Fig 3.9	Arduino Uno	19
Fig 3.10	ATmega 328 Controller	21
Fig 3.11	Arduino Uno Pinout	22
Fig 3.12	Motor Driver	25
Fig 3.13	Basic Block Diagram Regulated Power Supply	26
Fig 3.14	Transformer and Center Tapped transformer	26

Fig 3.15	Half Wave Rectifier	28
Fig 3.16	Center Tapped Transformer	28
Fig 3.17	Bridge Rectifier	29
Fig 3.18	Center Tapped Transformer	29
Fig 3.19	Circuit Diagram of Power Supply	32
Fig 3.20	HC-05 Bluetooth Module	33
Fig 3.21	Blocks Of HC-05 Bluetooth Module	34
Fig 3.22	12v High Torque DC Gear Motor	35
Fig 3.23	Internal Blocks of Gear Motor	36
Fig 3.24	Solar panel	37
Fig 3.25	Internal Parts of Solar Panel	39
Fig 3.26	SPDT Relay	40
Fig 3.27	Configuration Of SPDT Relay	41
Fig 3.28	SPDT Relay	41
Fig 3.29	USB Cabel	42
Fig 3.30	Download Arduino Ide Software	43
Fig 3.31	Launch Arduino Ide	44
Fig 3.32	Open First Project	45
Fig 3.33	Open An Existing Project Example	46
Fig 3.34	Select Arduino Board	47
Fig 3.35	Select Serial Port	48
Fig 3.36	Upload The Program to Board	49
Fig 4.1	Solar power based multipurpose agriculture robot	53
Fig 4.2	Ploughing operation	53
Fig 4.3	Seed dispensing operation	54
Fig 4.4	Water sprinking operation	54

LIST OF TABLES

TABLE NO	TITLE	PAGE NO
Table 3.1	Pin Description	24

CHAPTER –1

INTRODUCTION

An Embedded System is a combination of computer hardware and software, and perhaps additional mechanical or other parts, designed to perform a specific function. A good example is the microwave oven. Almost every household has one, and tens of millions of them are used everyday, but very few people realize that a processor and software are involved in the preparation of their lunch or dinner.

This is in direct contrast to the personal computer in the family room. It too is comprised of computer hardware and software and mechanical components (disk drives, for example). However, a personal computer is not designed to perform a specific function rather; it is able to do many different things. Many people use the term general-purpose computer to make this distinction clear. As shipped, a general-purpose computer is a blank slate; the manufacturer does not know what the customer will do wish it. One customer may use it for a network file server another may use it exclusively for playing games, and a third may use it to write the next great American novel.

Frequently, an embedded system is a component within some larger system. For example, modern cars and trucks contain many embedded systems. One embedded system controls the anti-lock brakes, other monitors and controls the vehicle's emissions, and a third displays information on the dashboard. In some cases, these embedded systems are connected by some sort of a communication network, but that is certainly not a requirement.

If an embedded system is designed well, the existence of the processor and software could be completely unnoticed by the user of the device. Such is the case for a microwave oven, VCR, or alarm clock. In some cases, it would even be possible to build an equivalent device that does not contain the processor and software. This could be done by replacing the combination with a custom integrated circuit that performs the same functions in hardware. However, a lot of flexibility is lost when a design is hard-cooled in this way. It is much easier, and cheaper, to change a few lines of software than to redesign a piece of custom hardware.

1.1 EMBEDDED SYSTEM :

An embedded system is one kind of a computer system mainly designed to perform several tasks like to access, process, and store and also control the data in various electronics- based systems.

Embedded systems are a combination of hardware and software where software is usually known as firmware that is embedded into the hardware. It gives the o/p within the time limits. Embedded systems support to make the work more perfect and convenient. So, we frequently use embedded systems in simple and complex devices too. Embedded system has two sections, they are

1. Hardware
2. Software

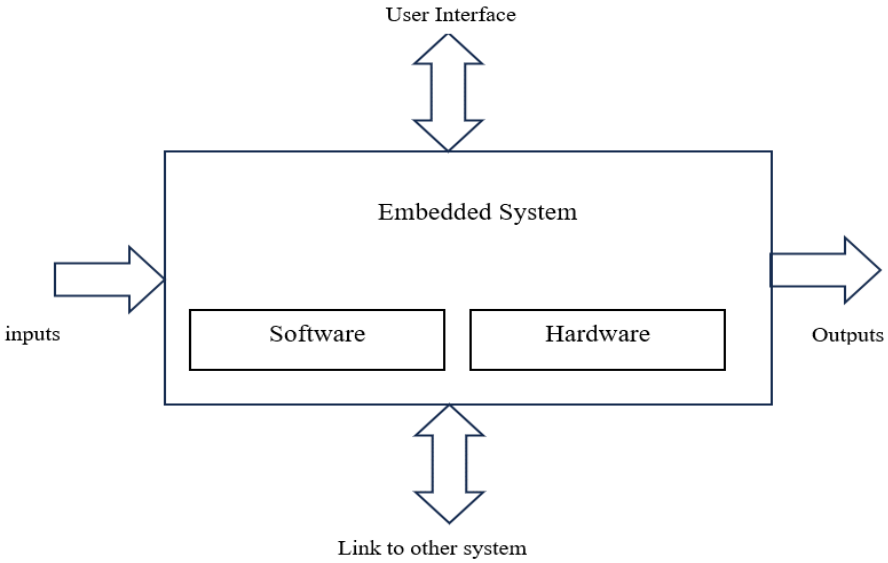

Fig : 1.1 Overview Of Embedded System

Embedded Technology is now in its prime and the wealth of knowledge available is mind blowing. There are many open-source designs available for study and use by anyone from a hobbyist to an engineer. Before moving into a detailed discussion on embedded systems, it is best to understand the essence of an embedded system.

1.2 EMBEDDED SYSTEM HARDWARE :

As with any electronic system, an embedded system requires a hardware platform on which it performs the operation. Embedded system hardware is built with a microprocessor or micro- controller. The embedded system hardware has elements like input output(I/O) interface, memory and the display.

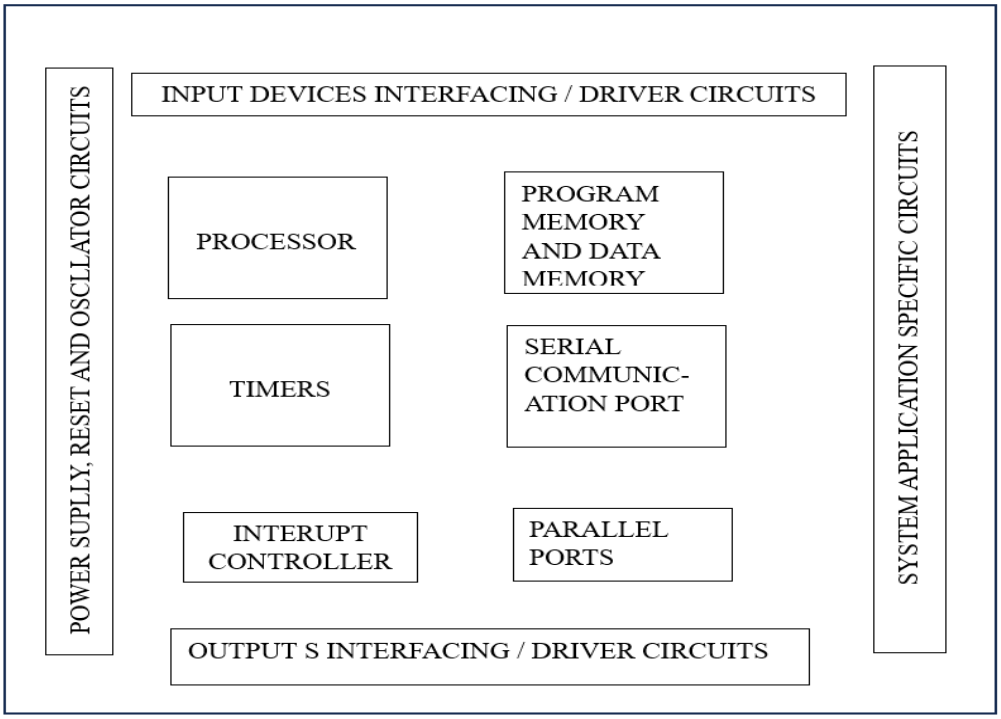

Fig :1.2 Block Diagram of Embedded System

1.3 EMBEDDED SYSTEM SOFTWARE :

Software is controlled or initiated by a machine interface. The embedded software is in built in all electronics like cars, telephones, robots, security systems, which is simple to run on an 8-bit microcontroller using memory up to a few KB. It helps in processing complex operations and determines the accurate computation framework. The program instructions written for embedded systems are referred to as firmware, and are stored in Read-Only- Memory (ROM) or Flash memory. Embedded firmware refers to the control algorithm (program instructions) and configuration settings the embedded system developer dumps into Program memory (ROM) of the embedded system.

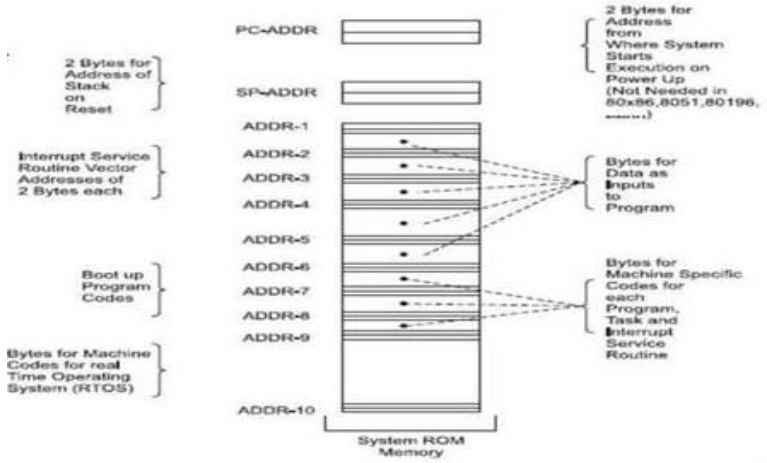

Fig: 1.3 System ROM embedding the software, RTOS, data and vector Addresses

1.4 HISTORY AND FUTURE :

Given the definition of embedded systems earlier is this chapter the first such systems could not possibly have appeared before 1971. That was the year Intel introduced the world's first microprocessor. This chip, the 4004, was designed for use in a line of business calculators produced by the Japanese Company Busicom. In 1969, Busicom asked Intel to design a set of custom integrated circuits-one for each of their new calculator models. The 4004 was Intel's response rather than design custom hardware for each calculator, Intel proposed a general-purpose circuit that could be used throughout the entire line of calculators. Intel's idea was that the software would give each calculator its unique set of features.

The microcontroller was an overnight success, and its use increased steadily over the next decade. Early embedded applications included unmanned space probes, computerized traffic lights, and aircraft flight control systems. In the 1980s, embedded systems quietly rode the waves of the microcomputer age and brought microprocessors into every part of our kitchens (bread machines, food processors, and microwave ovens), living rooms and workplaces

1.5 REAL TIME SYSTEMS :

One subclass of embedded is worthy of an introduction at this point. As commonly defined, a real-time system is a computer system that has timing constraints. In other words, a real-time system is partly specified in terms of its ability to make certain calculations or decisions in a timely manner. These important calculations are said to have deadlines for completion. And, for all practical purposes, a missed deadline is just as bad as a wrong answer.

The issue of what if a deadline is missed is a crucial one. For example, if the real-time system is part of an airplane's flight control system, it is possible for the lives of the passengers and crew to be endangered by a single missed deadline. However, if instead the system is involved in satellite communication, the damage could be limited to a single corrupt data packet. The more severe the consequences, the more likely it will be said that the deadline is "hard" and thus, the system is a hard real-time system. Real-time systems at the other end of this discussion are said to have "soft" deadlines.

All of the topics and examples presented in this book are applicable to the designers of real-time system who is more delight in his work. He must guarantee reliable operation of the software and hardware under all the possible conditions and to the degree that human lives depend upon three system's proper execution, engineering calculations and descriptive paperwork.

1.6APPLIACTIONS :

1. Military and aerospace embedded software applications.
2. Communication Applications.
3. Industrial automation and process control software.
4. Mastering the complexity of applications.
5. Reduction of product design time.
6. Real time processing of ever increasing

1.7 APPLIACTIONS AREAS:

Nearly 99 per cent of the processors manufactured end up in embedded systems. The embedded system market is one of the highest growth areas as these systems are used in very market segment- consumer electronics, office automation, industrial automation, biomedical engineering, wireless communication, data communication, telecommunications, transportation, military and so on.

***Consumer appliances**:*

At home we use a number of embedded systems which include digital camera, digital diary, DVD player, electronic toys, microwave oven, remote controls for TV and air-conditioner, VCO player, video game consoles, video recorders etc. Today's high-tech car has about 20 embedded systems for transmission control, engine spark control, air-conditioning, navigation etc. Even wristwatches are now becoming embedded systems. The palmtops are powerful embedded systems using which we can carry out many general-purpose tasks such as playing games and word processing.

Office automation:

The office automation products using em embedded systems are copying machine, fax machine, key telephone, modem, printer, scanner etc.

***Industrial automation**:*

Today a lot of industries use embedded systems for process control. These include pharmaceutical, cement, sugar, oil exploration, nuclear energy, electricity generation and transmission. The embedded systems for industrial use are designed to carry out specific tasks such as monitoring the temperature, pressure, humidity, voltage, current etc., and then take appropriate action based on the monitored levels to control other devices or to send information to a centralized monitoring station. In hazardous industrial environment, where human presence has to be avoided, robots are used, which are programmed to do specific jobs.

***Medical electronics**:*

Almost every medical equipment in the hospital is an embedded system. These equipments include diagnostic aids such as ECG, EEG, blood pressure measuring devices, X-ray scanners; equipment used in blood analysis, radiation, colonscopy, endoscopy etc. Developments in medical electronics have paved way for more accurate diagnosis of diseases.

***Computer networking**:*

Computer networking products such as bridges, routers, Integrated Services Digital Networks (ISDN), Asynchronous Transfer Mode (ATM), X.25 and frame relay switches are embedded systems which implement the necessary data communication protocols. For example, a router interconnects two networks. The two networks may be running different protocol stacks. The router's function is to obtain the data packets from incoming pores, analyze the packets and send them towards the destination after doing necessary protocol conversion.

***Telecommunications**:*

In the field of telecommunications, the embedded systems can be categorized as subscriber terminals and network equipment. The subscriber terminals such as key telephones, ISDN phones, terminal adapters, web cameras are embedded systems. The network equipment includes multiplexers, multiple access systems, Packet Assemblers Dissemblers (PADs), sate11ite modems etc. IP phone, IP gateway, IP gatekeeper etc. are the latest embedded systems that provide very low-cost voice communication over the Internet.

***Wireless technologies**:*

Advances in mobile communications are paving way for many interesting applications using embedded systems. The mobile phone is one of the marvels of the last decade of the 20's century. It is a very powerful embedded system that provides voice communication while we are on the move. The Personal Digital Assistants and the palmtops can now be used to access multimedia services over the Internet. Mobile communication infrastructure such as base station controllers, mobile switching centers are also powerful embedded systems.

Insemination:

Testing and measurement are the fundamental requirements in all scientific and engineering activities. The measuring equipment we use in laboratories to measure parameters such as weight, temperature, pressure, humidity, voltage, current etc. are all embedded systems. Test equipment such as oscilloscope, spectrum analyzer, logic analyzer, protocol analyzer, radio communication test set etc. are embedded systems built around powerful processors. Thank to miniaturization, the test and measuring equipment are now becoming portable facilitating easy testing and measurement in the field by field-personnel.

Security:

Security of persons and information has always been a major issue. We need to protect our homes and offices; and also the information we transmit and store. Developing embedded systems for security applications is one of the most lucrative businesses nowadays. Security devices at homes, offices, airports etc. for authentication and verification are embedded systems. Encryption devices are nearly 99 per cent of the processors that are manufactured end up in embedded systems. Embedded systems find applications in. every industrial segment consumer electronics, transportation, avionics, biomedical engineering, manufacturing, process control and industrial automation, data communication, telecommunication, defense, security etc. Used to encrypt the data/voice being transmitted on communication links such as telephone lines. Biometric systems using fingerprint and face recognition are now being extensively used for user authentication in banking applications as well as for access control in high security buildings.

Finance*:*

Financial dealing through cash and cheques are now slowly paving way for transactions using smart cards and ATM (Automatic Teller Machine, also expanded as Any Time Money) machines. Smart card, of the size of a credit card, has a small micro-controller and memory; and it interacts with the smart card reader! ATM machine and acts as an electronic wallet. Smart card technology has the capability of ushering in a cashless society. Well, the list goes on. It is no exaggeration to say that eyes wherever you go, you can see, or at least feel, the work of an embedded system

1.8LITERATURE SURVEY :

Solar power systems for agriculture Applications:

Look for research papers, articles, and patents discussing the integration of solar panels with agricultural machinery. This includes studies on solar energy harvesting, storage, and utilization in the context of farming equipment.

Multi-purpose Agricultural Robots:

Explore existing literature on multi-functional robots designed for agricultural tasks. Identify their capabilities, design principles, control systems, and performance evaluations. This can include tasks such as planting, weeding, spraying, harvesting, and monitoring.

Human-Robot Interaction and User Experience:

Consider studies on human-robot interaction in agricultural settings. Look for research on user interfaces, usability, ergonomics, and safety aspects of robot operation in farm environments.

Case Studies and Field Trials:

Review case studies and field trials of solar-powered agricultural robots in real-world farming scenarios. Pay attention to performance metrics, practical challenges, and lessons learned from deployment experiences.

Future Trends and Emerging Technologies:

Lastly, explore emerging trends and technologies in the field of agricultural robotics. This includes advancements in AI, machine learning, robotics hardware, and software frameworks that could impact the design and functionality of solar-powered multi-purpose agriculture robots

CHAPTER – 2

EXISTING METHOD

In present days, farmers are using various machines for various purposes like seed dispensing, ploughing and water sprinkling

We conducted a survey on the where the farmers are facing many problems regarding to the ploughing and seed dispensing in the manual process. As there are no well organized equipment's to support the farmers. Modern techniques are need to be implemented.

Drawbacks :

1. Wastage of seeds
2. Wastage of water
3. More human involvement is necessary

2.1 MACHINES USED IN EXISTING SYSTEM :

Fig: 2.1.(a) water pumping machine

Fig:2.1.(b) Ploughing machine

Fig: 2.1.(c) seed dispencer

CHAPTER – 3

PROPOSED METHOD

3.1 OBJECTIVE OF THE PROPOSED SYSTEM

This is the advanced booming technology in the agriculture sector. However, certain considerations and approaches should be taken when designing these types of robots, taking into account the agricultural setting in which they will be used. The main aim of this project is to provide smart farming at low cost without compromising on the efficiency of the processes involved. This project discusses the design procedure and development of multitasking robot that could be applied for agricultural purpose like soil digging, sowing seeds as well as water pumping to the field. This robot works on solar energy and will also help in conserving non-renewable energy resources on a large scale thereby contributing towards the sustainability of our planet.

3.2 BLOCK DIAGRAM:

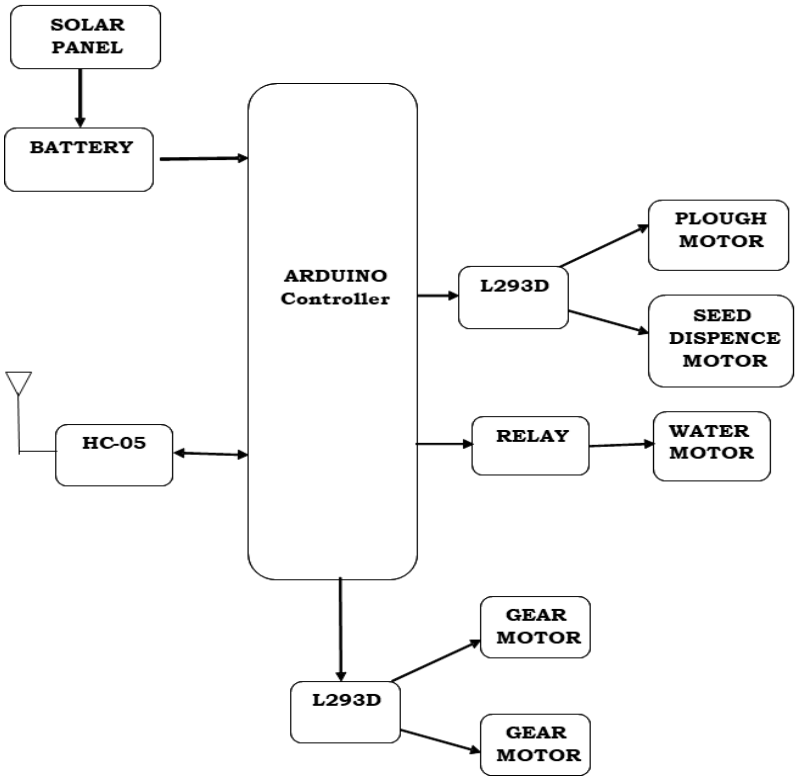

Fig: 3.1 block diagram of the agriculture robot

In this proposed system we have developed a robot for doing the purposes of seed dispensing, ploughing and water sprinkling. That can be operated with the HC-05 Bluetooth serial communication and ARDUINO used as main board.

The solar powered multi purpose agri robot using android application the gives the more efficiency in the agriculture fields. The project contains the several components which are described below

Solar panel:

When the sun shines onto a solar panel, energy from the sunlight is absorbed by the PV cells in the panel. This energy creates electrical charges that move in response to an internal electrical field in the cell, causing electricity to flow.

HC-05 Bluthooth module :

The HC-05 is a class 2 Bluetooth module designed for transparent wireless serial communication. It is pre-configured as a slave Bluetooth device. Once it is paired to a master Bluetooth device such as PC, smart phones and tablet, its operation becomes transparent to the user.

L293D driver IC :

The L293D is designed to provide bidirectional drive currents of up to 600-mA at voltages from 4.5 V to 36 V. Both devices are designed to drive inductive loads such as relays, solenoids, DC and bipolar stepping motors, as well as other high-current/high-voltage loads in positive-supply applications.

BATTERY :

Battery is a device that converts chemical energy contained within its active materials directly into electric energy by means of an electrochemical oxidation-reduction (redox) reaction. This type of reaction involves the transfer of electrons from one material to another via an electric circuit.

ARDIUNO :

Arduino is an open-source electronics platform based on easy-to-use hardware and software. Arduino boards are able to read inputs - light on a sensor, a finger on a button, or a Twitter message - and turn it into an output - activating a motor, turning on an LED, publishing something online

SPDT relay :

SPDT relays are commonly used in control systems, where they can be used to switch between two different circuits or to switch a single circuit on or off. For example, an SPDT relay could be used to switch between two different lighting circuits or to control a motor by switching the power supply on or off

Gear motor :

A gear motor is a motor designed with an integrated gearbox. Gear motors function as torque multipliers and speed reducers thus requiring less power to move a given load. The design of the gearbox structure, type of gears, lubrication and type of coupling affects its performance.

3.3 CIRCUIT DIAGRAM

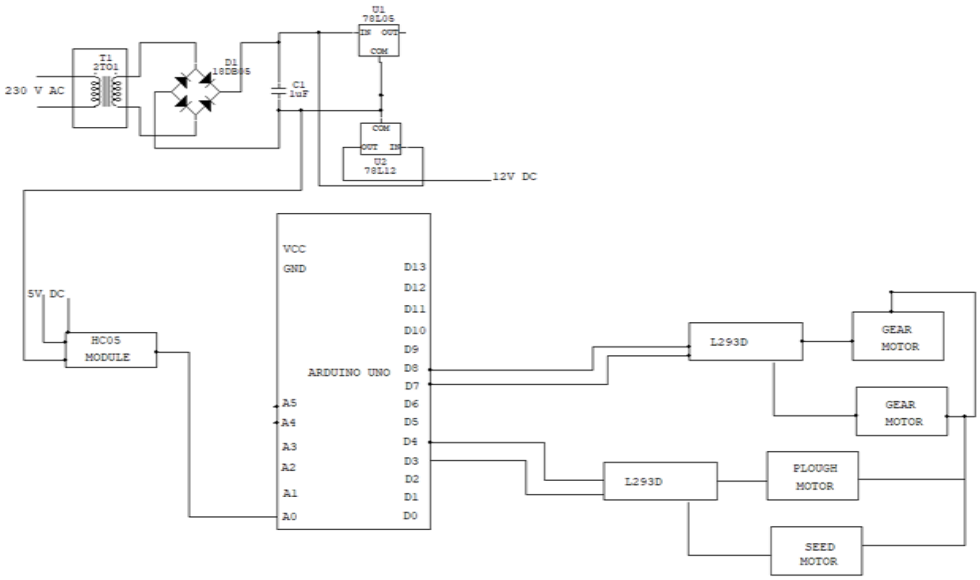

Fig:3.2 Circuit Diagram of Proposed Method

3.4 FLOW CHART:

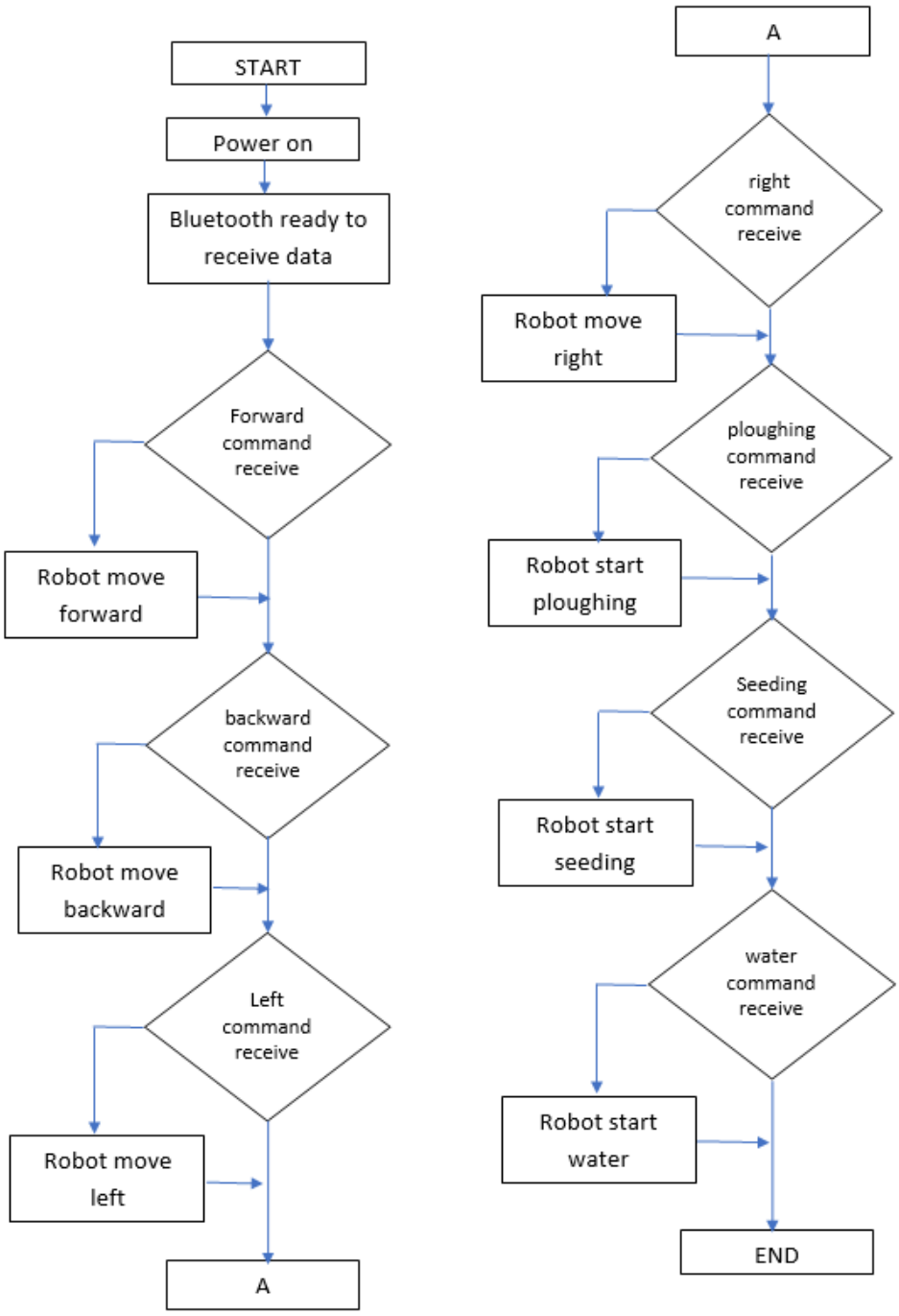

Fig 3.3 : Flow chart

3.5 WORKING PROCEDURE:

Working of the agriculture robot:

Step1: Switch on the solar powered multipurpose agriculture robot using android application.

Step 2: Connect the HC-05 Bluetooth module to the android mobile application using the default password 1234.

Step 3: Once the module is connected successfully, we are able to operate the robot with commands.

Step 4: Based on the commands received the robot can perform the specified work. The commands used are described below:

F - Vehicle will move forward

B - Vehicle will move Backward

L - Vehicle will move Left

R - Vehicle will move Right

1 - Vehicle will switch on ploughing

2 - Vehicle will switch off ploughing

3 - Vehicle will start seed dispensing

4 - Vehicle will stop seed dispensing

5 - WATER motor will start

6 - WATER motor will stop

Step 5: when the command F is received by the robot through mobile app, the robot starts moving in forward direction

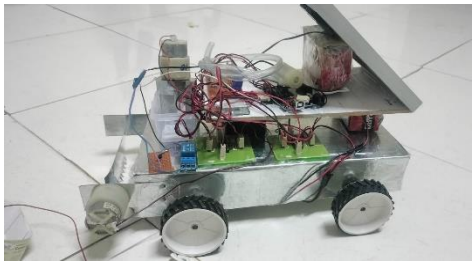

Fig :3.4 robot moving forward direction

Step 6: when the command B is received by the robot through mobile app, the robot starts moving in Backward direction

Step 7: when the command L is received by the robot through mobile app, the robot starts moving in Left direction

Step 8 : when the command R is received by the robot through mobile app, the robot starts moving in Right direction

Step 9 : when the command 1 is received by the robot through mobile app, the robot starts ploughing operation.

Fig:3.5 start ploughing

Step 10: when the command 2 is received by the robot through mobile app, the robot stops ploughing operation.

Step 11: when the command 3 is received by the robot through mobile app, the robot starts seed dispensing operation.

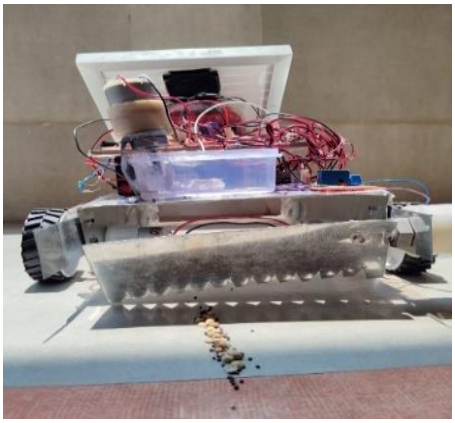

Fig:3.6 start seeding

Step 12 : when the command 4 is received by the robot through mobile app, the robot stop seed dispensing operation.

Step 13: when the command 5 is received by the robot through mobile app, the robot starts Water sprinkling operation.

Step 14: when the command 6, is received by the robot through mobile app, the robot stop Water sprinkling operation.

Fig:3.7 stop watering

3.6 HARDWARE REQUIREMENTS:

Here we use hardware and software components, Arduino UNO, L293D diver, HC-05 Bluetooth module, SPDT relay, gear motors, solar panel and DC battery and the programming language are the software requirements.

The working of the each component is shown below.

3.6.1 ARDUINO UNO:

Arduino Uno is a very valuable addition in the electronics that consists of USB interface, 4digital 10 pins, 6 analog pins, and Atmega328 microcontroller. It also supports serial Communication using Tx and Rx pins.

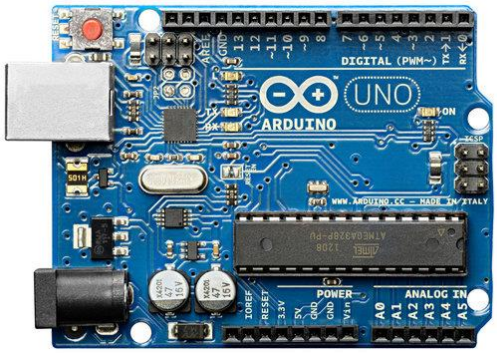

Fig: 3.8.(a) ARDUINO UNO

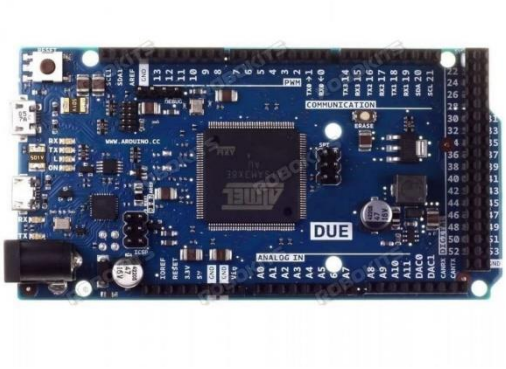

Fig: 3.8.(b) ARDUINO Due

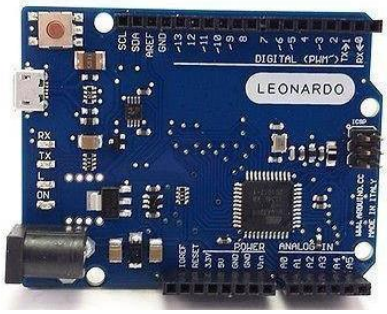

Fig :3.8.(c) ARDUINO Leonardo

Fig:3.8.(d)ARDUINO Mega

- There are many versions of Arduino boards introduced in the market like Arduino Uno, Arduino Due, Arduino Leonardo, and Arduino Mega, however, most common versions are Arduino Uno and Arduino Mega.

- If you are planning to create a project relating to digital electronics, embedded system, robotics, or loT, then using Arduino Uno would be the best, easy and most economical.
- It is an open-source platform, means the boards and software are readily available and anyone can modify and optimize the boards for better functionality. The software used for Arduino devices is called IDE (Integrated Development Environment) which is free to use and required some basic skills to learn it. It can be programmed using C and C++ language.
- Some people get confused between Microcontroller and Arduino. While former is just an on system 40 pin chip that comes with a built-in microprocessor and later is a bourd that comes with the microcontroller in the base of the board, bootinader and allows easy access to imput output pins and makes uploading or burning of the program very easy.

Introduction to Arduino :

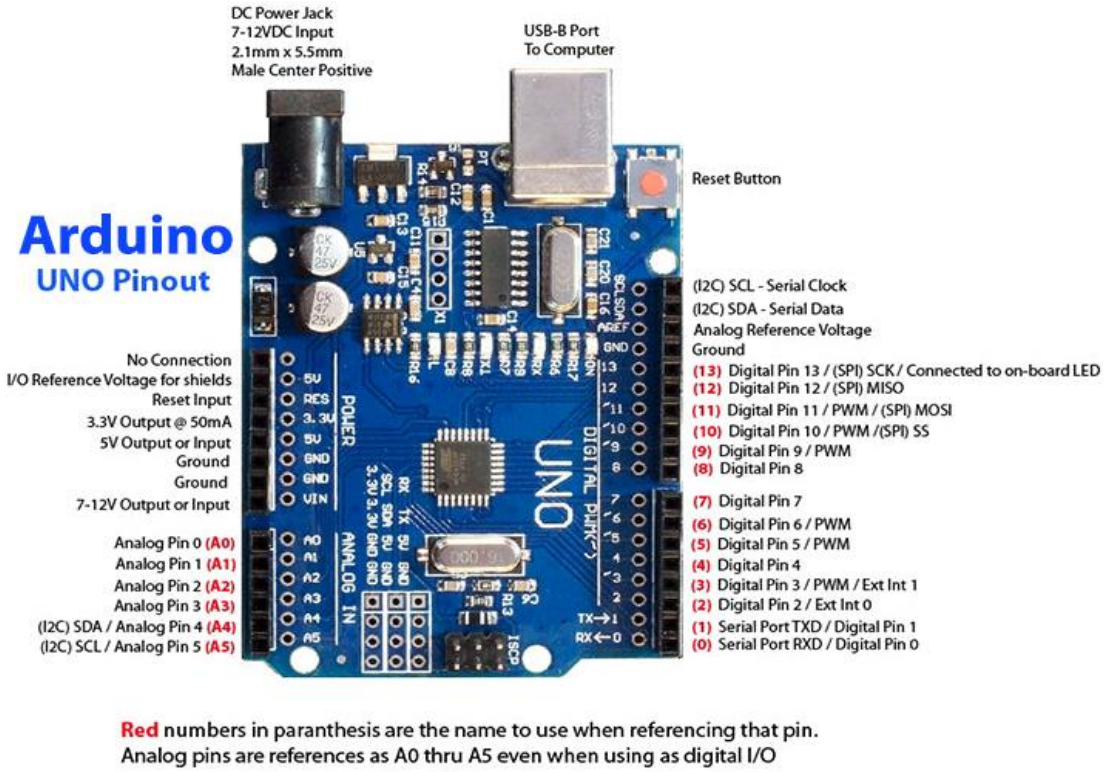

Fig :3.9 Arduino UNO

Arduino Uno is a microcontroller board developed by Arduino.cc which is an open- source electronics platform mainly based on AVR microcontroller Atmega328 First Arduino project was started in Interaction Design Institute Ivrea in 2003 by David Cuartielles and Massimo Banzi with the intention of providing a cheap and flexible way to students and professional for controlling a number of devices in the real world.

The current version of Arduino Uno comes with USB interface, 6 analog input pins, 14 I/O digital portsthat are used to connect with external electronic circuits. Out of 14 I/O ports, 6 pins can be used for PWM output. It allows the designers to control and sense the external electronic devices in the real world.

This board comes with all the features required to run the controller and can be directly connected to the computer through USB cable that is used to transfer the code to the controller using IDE (Integrated Development Environment) software, mainly developed to program Arduino IDE is equally compatible with Windows, MAC or Linux Systems, however, Windows is preferable to use. Programming languages like C and C++ are used in IDE. Apart from USB, battery or AC to DC adopter can also be used to power the board.

Arduino Uno boards are quite similar to other boards in Arduino family in terms of use and functionality, however, Uno boards don't come with FTDI USB to Serial driver chip.

There are many versions of Uno boards available, however, Arduino Nano V3 and Arduino Uno are the most official versions that come with Atmega328 8-bit AVR Atmel microcontroller where RAM memory is 32KB. When nature and functionality of the task go complex, Micro SD card can be added in the boards to make them store more information. Features of Arduino:

Arduino Uno comes with USB interface i.e., USB port is added on the board in order to develop serial communication with the computer.

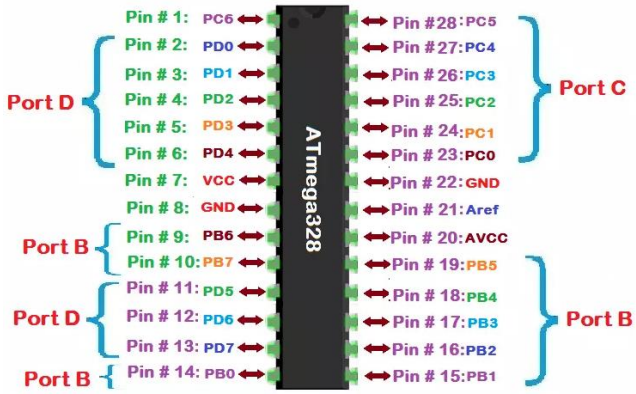

Fig:3.10 ATmega 328 controller

- It is an open source platform where anyone can modify and optimize the board based on the number of instructions and task they want to achieve.
- This board comes with a built-in regulation feature which keeps the voltage under control when the device is connected to the external device.
- Reset pin is added in the board that reset the whole board and takes the running program in the initial stage. This pin is useful when board hangs up in the middle of the running program, pushing this pin will clear everything up in the program and starts the program right from the beginning
- There are 14 1/0 digital and 6 analog pins incorporated in the board that allows the external connection with any circuit with the board. These pins provide the flexibility and ease of use to the external devices that can be connected through these pins.
- These pins measure from 0 to 5V, however, they can be configured to the high-range using analog Reference function and AREF pin. 13KB of flash memory is used to store the number of instructions in the form of code
- Only 5 V is required to turn the board on, which can be achieved directly using USB port or external adopter, however, it can support external power source up to 12 V which can be regulated and limit to 5 V or 3.3 V based on the requirement of the project.

Arduino Pinout:

Arduino Uno is based on AVR microcontroller called Atmega328. This controller comes with 2KB SRAM, 32KB of flash memory and IKB of EEPROM. Arduino Board comes with 14 ligital pins and 6 analog pins. ON-chip ADC is used to sample these pins. A 16 MHz frequency rystal oscillator is equipped on the board. Following figure shows the pinout of the Arduino Uno Board

Pin Description:

There are several I/O digital and analog pins placed on the board which operates at SV These pins come with standard operating ratings ranging between 20mA to 40mA. Internal pull- up resistors are used in the board that limits the current exceeding from the given operating conditions. However, too much increase in current makes these resisters useless and damages the device.

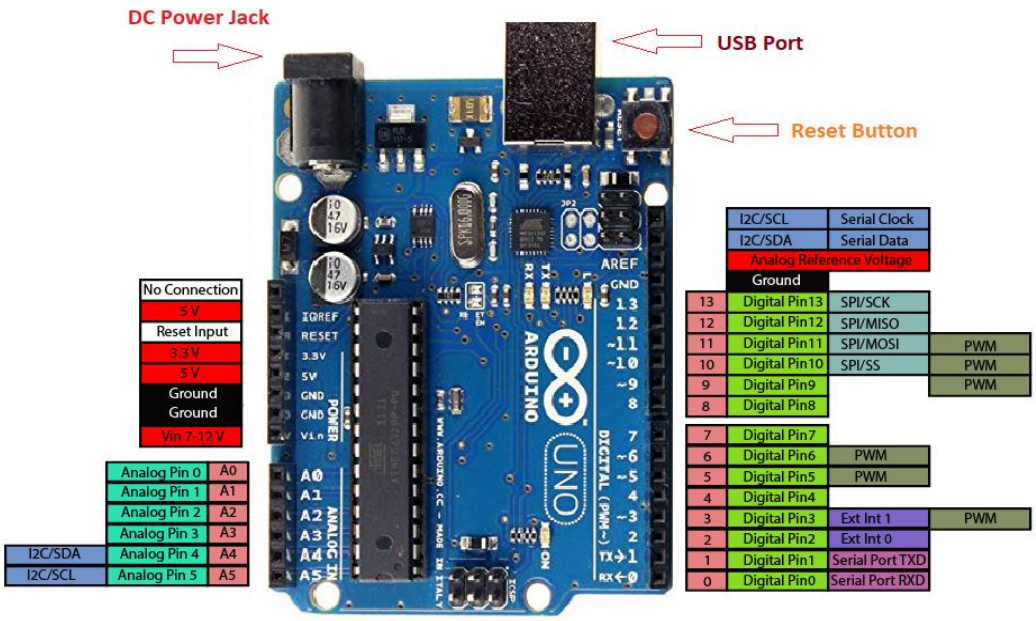

Fig:3.11 Arduino UNO Pinout

LED: Arduino Uno comes with built-in LED which is connected through pin 13. Providing HIGH value to the pin will turn it ON and LOW will turn it OFF. Vin: It is the input voltage provided to the Arduino Board. It is different than 5 V supplied through a USB port. This pin is used to supply voltage. If a voltage is provided through power jack, it can be accessed through this pin.

SV: This board comes with the ability to provide voltage regulation. 5V pin is used to provide output regulated voltage. The board is powered up using three ways i.e.USB, Vin pin of the board or DC power jack.

USB supports voltage around SV while Vin and Power Jack support a voltage ranges between 7V to 20V. It is recommended to operate the board on 5V. It is important to note that, if a voltage is supplied through 5V or 3.3V pins, they result in bypassing the voltage regulation that can damage

the board if voltage surpasses from its limit.

GND: These are ground pins. More than one ground pins are provided on the board which can be

used as per requirement.

Reset: This pin is incorporated on the board which resets the program running on the board. Instead of physical reset on the board, IDE comes with a feature of resetting the board through programming.

IOREF: This pin is very useful for providing voltage reference to the board. A shield is used to read the voltage across this pin which then select the proper power source.

PWM: PWM is provided by 3, 5, 6,9,10, 11pins. These pins are configured to provide 8-bit output PWM.SPI: It is known as Serial Peripheral Interface. Four pins 10(SS), 11(MOSI), 12(MISO), 13(SCK) provide SPI communication with the help of SPI library.

AREF: It is called Analog Reference. This pin is used for providing a reference voltage to the analog inputs.

TWI: It is called Two-wire Interface. TWI communication is accessed through Wire Library. A4and A5 pins are used for this purpose.

Serial Communication: Serial communication is carried out through two pins called Pin 0 (Rx) and Pin 1 (Tx). Rx pin is used to receive data while Tx pin is used to transmit data.

External Interrupts: Pin 2 and 3 are used for providing external interrupts. An interrupt is called by providing LOW or changing value.

Arduino UNO Technical Specifications:

Microcontroller	ATmega328P 8 bit AVR family microcontroller
Operating voltage	5V
Recommended Input Voltage	7-12V
Input Voltage Limits	6-20V
Analog Input Pins	6 (A0-A5)
Digital I/O Pins	14
DC Current on I/O Pins	40mA
DC Current on 3.3V Pin	50mA
Flash Memory	32KB
SRAM	2KB
EEPROM	1KB
Frequency	16Mhz

Table :3.1 pin description

3.6.2 MOTOR DRIVER :

A motor driver is an integrated circuit chip which is usually used to control motors in anomous robots. Motor driver act as an interface between Arduino and the motors. The most amonly used motor driver IC's are from the L293 series such as L293D, L293NE, etc. These are designed to control 2 DC motors simultaneously. L293D consist of two H-bridge. H- Ige is the simplest circuit for controlling a low current rated motor. We will be referring the for driver IC as L293D only. L293D has16 pins.

Working of L293D :

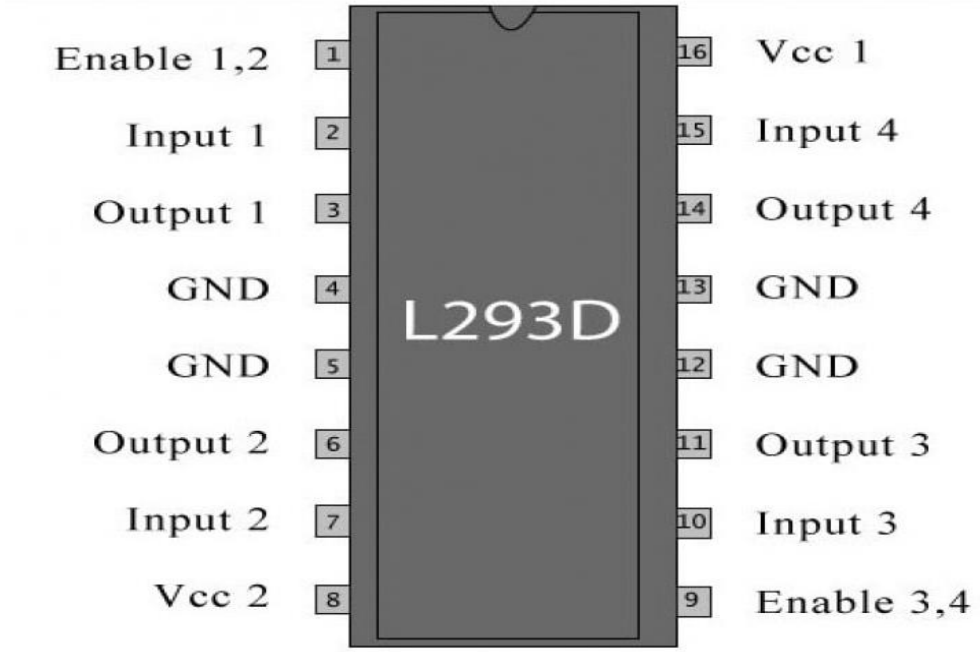

Fig: 3.12 motor driver

There are 4 input pins for 1293d, pin 2, 7 on the left and pin 15, 10 on the right asshownon pin diagram. Left input pins will regulate the rotation of motor connected acrossleft side and ght input for motor on the right-hand side. The motors are rotated on the basis of the inputs ovided across the input pins as LOGIC 0 or LOGIC 1.

L293D logic table.

Let's consider a Motor connected on left side output pins (pin 3, 6). For rotating the motor clockwise direction, the input pins have to be provided with Logic 1 and Logic).

n2-Logic 1 and Pin 7 = Logic 0 | ClockwiseDirection

2-Logic 0 and Pin 7-Logic 1 | Anticlockwise Direction

12-Logic 0 and Pin 7 Logic 0 | Idle [No rotation] [Hi-Impedance state]

2-Logic 1 and Pin 7-Logic 1 | Idle [Norotation] Circuit Diagram for 1293d motor driver IC controller:

Voltage Specification:

VCC is the voltage that it needs for its own internal operation 5v; L293D will not use this Itage for driving the motor. For driving the motors, it has a separate provision to provide Hor supply VSS (V supply). L293d will use this to drive the motor. It means if you want to erate a motor at 9V then you need to provide a Supply of 9V across VSS Motor supply.

The maximum voltage for VSS motor supply is 36V. It can supply a max current of 600mA per channel. Since it can drive motors Up to 36v hence you can drive pretty big motors with this 12934. VCC pin 16 is the voltage for its own internal Operation. The maximum voltage ranges from 5v and up to 36v.

3.6.3 POWER SUPPLY

All digital circuits require regulated power supply. In this article we are going to learn how to get a regulated positive supply from the mains supply.

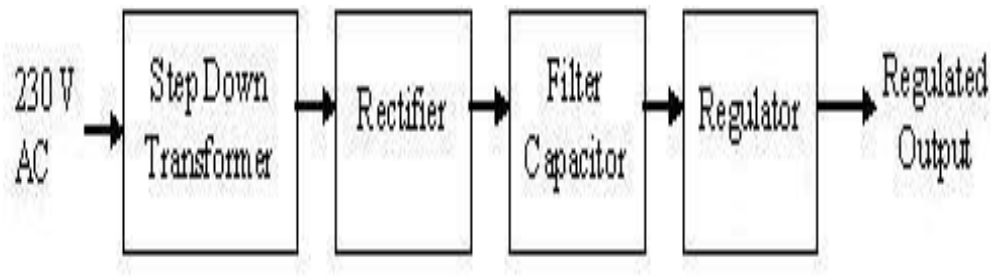

Fig: 3.13 Basic block diagram regulated power supply

TRANSFORMER :

Fig: 3.14 transformer and center tapped transformer

A transformer consists of two coils also called as “WINDINGS” namely PRIMARY & SECONDARY.

They are linked together through inductively coupled electrical conductors also called as CORE. A changing current in the primary causes a change in the Magnetic Field in the core & this in turn induces an alternating voltage in the secondary coil.

If load is applied to the secondary then an alternating current will flow through the load. If we consider an ideal condition then all the energy from the primary circuit will be transferred to the secondary circuit through the magnetic field.

$$P_{primary} = P_{secondary}$$

So

$$I_p V_p = I_s V_s$$

The secondary voltage of the transformer depends on the number of turns in the Primary as well as in the secondary.

$$\frac{V_s}{V_p} = \frac{N_s}{N_p}$$

RECTIFIER

A rectifier is a device that converts an AC signal into DC signal. For rectification purpose we use a diode, a diode is a device that allows current to pass only in one direction i.e. when the anode of the diode is positive with respect to the cathode also called as forward biased condition & blocks current in the reversed biased condition.

Rectifier can be classified as follows:

1) Half Wave rectifier:

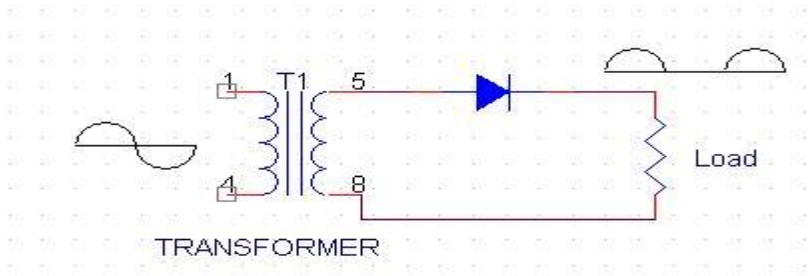

Fig:3.15 half wave rectifier

This is the simplest type of rectifier as you can see in the diagram a half wave rectifier consists of only one diode. When an AC signal is applied to it during the positive half cycle the diode is forward biased & current flows through it. But during the negative half cycle diode is reverse biased & no current flows through it. Since only one half of the input reaches the output, it is very inefficient to be used in power supplies.

2) Full wave rectifie:

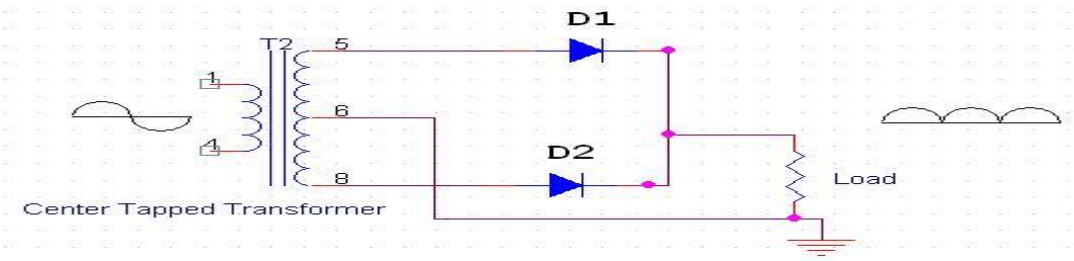

Fig: 3.16 : center tapped transformer

Half wave rectifier is quite simple but it is very inefficient, for greater efficiency we would like to use both the half cycles of the AC signal. This can be achieved by using a center tapped transformer i.e. we would have to double the size of secondary winding & provide connection to the center.

So during the positive half cycle diode D1 conducts & D2 is in reverse biased condition. During the negative half cycle diode D2 conducts & D1 is reverse biased. Thus we get both the half cycles across the load.

3) Bridge Rectifier:

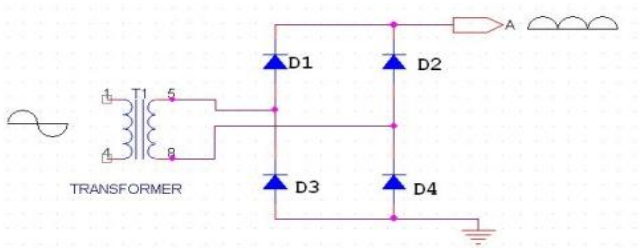

Fig: 3.17 bridge rectifier

As the name suggests it converts the full wave i.e. both the positive & the negative half cycle into DC thus it is much more efficient than Half Wave Rectifier & that too without using a center tapped transformer thus much more cost effective than Full Wave Rectifier.

Full Bridge Wave Rectifier consists of four diodes namely D1, D2, D3 and D4. During the positive half cycle diodes D1 & D4 conduct whereas in the negative half cycle diodes D2 & D3 conduct thus the diodes keep switching the transformer connections so we get positive half cycles in the output.

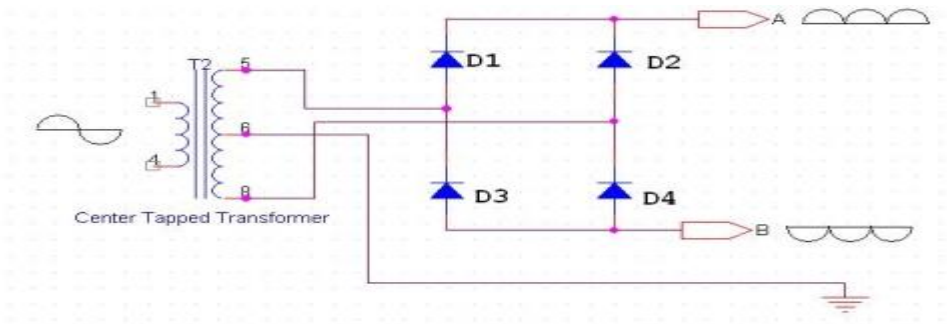

Fig: 3.18 Center Tapped Transformer

If we use a center tapped transformer for a bridge rectifier we can get both positive & negative half cycles which can thus be used for generating fixed positive & fixed negative voltages.

FILTER CAPACITOR

Even though half wave & full wave rectifier give DC output, none of them provides a constant output voltage. For this we require to smoothen the waveform received from the rectifier. This can be done by using a capacitor at the output of the rectifier this capacitor is also called as “FILTER CAPACITOR” or “SMOOTHING CAPACITOR” or “RESERVOIR CAPACITOR”. Even after using this capacitor a small amount of ripple will remain.

We place the Filter Capacitor at the output of the rectifier the capacitor will charge to the peak voltage during each half cycle then will discharge its stored energy slowly through the load while the rectified voltage drops to zero, thus trying to keep the voltage as constant as possible.

If we go on increasing the value of the filter capacitor then the Ripple will decrease. But then the costing will increase. The value of the Filter capacitor depends on the current consumed by the circuit, the frequency of the waveform & the accepted ripple.

$$C = \frac{V_r F}{I}$$

Where,

Vr= accepted ripple voltage.(should not be more than 10% of the voltage)

I= current consumed by the circuit in Amperes.

F= frequency of the waveform. A half wave rectifier has only one peak in one cycle so F=25hz

Whereas a full wave rectifier has Two peaks in one cycle so F=100hz.

VOLTAGE REGULATOR *:*

A Voltage regulator is a device which converts varying input voltage into a constant regulated output voltage. Voltage regulator can be of two types

1) Linear Voltage Regulator

Also called as Resistive Voltage regulator because they dissipate the excessive voltage resistively as heat.

2) Switching Regulators.

They regulate the output voltage by switching the Current ON/OFF very rapidly. Since their output is either ON or OFF it dissipates very low power thus achieving higher efficiency as compared to linear voltage regulators. But they are more complex & generate high noise due to their switching action. For low level of output power switching regulators tend to be costly but for higher output wattage they are much cheaper than linear regulators.

The most commonly available Linear Positive Voltage Regulators are the 78XX series where the XX indicates the output voltage. And 79XX series is for Negative Voltage Regulators.

After filtering the rectifier output the signal is given to a voltage regulator. The maximum input voltage that can be applied at the input is 35V.Normally there is a 2-3 Volts drop across the regulator so the input voltage should be at least 2-3 Volts higher than the output voltage.

If the input voltage gets below the Vmin of the regulator due to the ripple voltage or due to any other reason the voltage regulator will not be able to produce the correct regulated voltage.

CIRCUIT DIAGRAM:

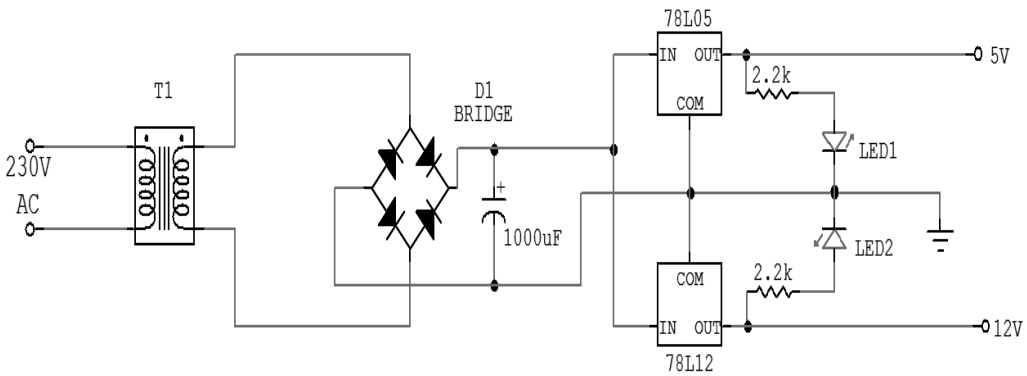

Fig :3.19 Circuit Diagram of power supply

IC 7805&7812:

7805 is an integrated three-terminal positive fixed linear voltage regulator. It supports an input voltage of 10 volts to 35 volts and output voltage of 5 volts. It has a current rating of 1 amp although lower current models are available. Its output voltage is fixed at 5.0V. The 7805 also has a built-in current limiter as a safety feature.

The 7805 will automatically reduce output current if it gets too hot. The last two digits represent the voltage; for instance, the 7812 is a 12-volt regulator. The 78xx series of regulators is designed to work in complement with the 79xx series of negative voltage regulators in systems that provide both positive and negative regulated voltages, since the 78xx series can't regulate negative voltages in such a system.

The 7805 & 78 is one of the most common and well-known of the 78xx series regulators, as it's small component count and medium-power regulated 5V make it useful for powering TTL devices.

3.6.4 HC-05 Bluetooth Module:

Bluetooth is a wireless technology standard for exchanging data over short distances (using short-wavelength UHF radio waves in the ISM band from 2.4 to 2.485 GHz from fixed and mobile devices, and building personal area networks (PANs). Invented by telecom vendor Ericsson in 1994, it was originally conceived as a wireless alternative to RS-232 data cables.

Bluetooth is managed by the Bluetooth Special Interest Group (SIG), which has more than 30,000 member companies in the areas of telecommunication, computing, networking, and consumer electronics. The IEEE standardized Bluetooth as **IEEE 802.15.1**, but no longer maintains the standard. The Bluetooth SIG oversees development of the specification, manages the qualification program, and protects the trademarks. A manufacturer must meet Bluetooth SIG standards to market it as a Bluetooth device. A network of patents apply to the technology, which are licensed to individual qualifying devices.

Bluetooth operates at frequencies between 2402 and 2480 MHz, or 2400 and 2483.5 MHz including guard bands 2 MHz wide at the bottom end and 3.5 MHz wide at the top. This is in the globally unlicensed (but not unregulated) industrial, scientific and medical (ISM) 2.4 GHz short-range radio frequency band. Bluetooth uses a radio technology called frequency-hopping spread spectrum. Bluetooth divides transmitted data into packets, and transmits each packet on one of 79 designated Bluetooth channels. Each channel has a bandwidth of 1 MHz. It usually performs 800 hops per second, with Adaptive Frequency-Hopping (AFH) enabled. Bluetooth low energy uses 2 MHz spacing, which accommodates 40 channels.

Originally, Gaussian frequency-shift keying (GFSK) modulation was the only modulation scheme available. Since the introduction of Bluetooth 2.0+EDR, π/4-DQPSK (differential quadrature phase shift keying) and 8DPSK modulation may also be used between compatible devices. Devices functioning with GFSK are said to be operating in basic rate (BR) mode where an instantaneous bit rate of 1 Mbit/s is possible. The term Enhanced Data Rate (EDR) is used to describe π/4-DPSK and 8DPSK schemes, each giving 2 and 3 Mbit/s respectively.

Fig: 3.20 HC-05 Bluetooth Module

Bluetooth is a packet-based protocol with a master/slave architecture. One master may communicate with up to seven slaves in a pico net. All devices share the master's clock. Packet exchange is based on the basic clock, defined by the master, which ticks at 312.5 µs intervals. Two clock ticks make up a slot of 625 µs, and two slots make up a slot pair of 1250 µs. In the simple case of single-slot packets the master transmits in even slots and receives in odd slots. The slave, conversely, receives in even slots and transmits in odd slots. Packets may be 1, 3 or 5 slots long, but in all cases the master's transmission begins in even slots and the slave's in odd slots.

The above is valid for "classic" BT. Bluetooth Low Energy, introduced in the 4.0 specification, uses the same spectrum but somewhat differently; see Bluetooth low energy# Radio interface.

Communication and connection

A master BR/EDR Bluetooth device can communicate with a maximum of seven devices in a piconet (an ad-hoc computer network using Bluetooth technology), though not all devices reach this maximum. The devices can switch roles, by agreement, and the slave can become the master (for example, a headset initiating a connection to a phone necessarily begins as master—as initiator of the connection—but may subsequently operate as slave).

The Bluetooth Core Specification provides for the connection of two or more piconets to form a scatter net, in which certain devices simultaneously play the master role in one piconet and the slave role in another.

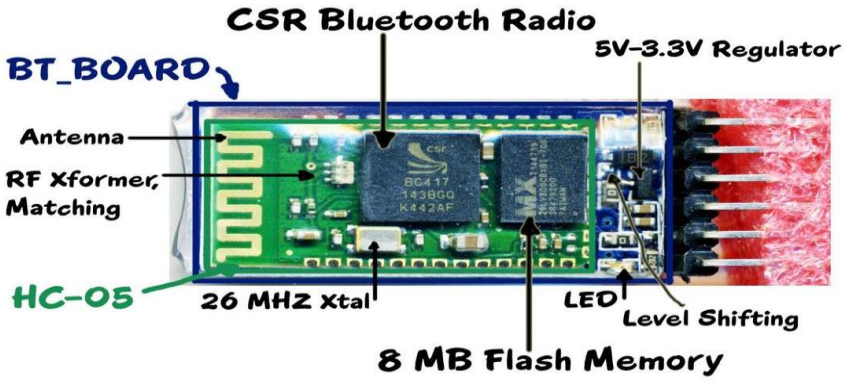

Fig :3.21 blocks of HC-05 Bluetooth module

At any given time, data can be transferred between the master and one other device (except for the little-used broadcast mode). The master chooses which slave device to address; typically, it switches rapidly from one device to another in a round-robin fashion. Since it is the master that chooses which slave to address, whereas a slave is (in theory) supposed to listen in each receive slot, being a master is a lighter burden than being a slave. Being a master of seven slaves is possible; being a slave of more than one master is possible. The specification is vague as to required behavior in scatter nets.

3.6.5 GEAR MOTOR:

Gear motors are complete motive force systems consisting of an electric motor and a reduction gear train integrated into one easy-to-mount and -configure package. This greatly reduces the complexity and cost of designing and constructing power tools, machines and appliances calling for high torque at relatively low shaft speed or RPM. Gear motors allow the use of economical low-horsepower motors to provide great motive force at low speed such as in lifts, winches, medical tables, jacks and robotics. They can be large enough to lift a building or small enough to drive a tiny clock.

Fig :3.22 12V High Torque DC GEAR MOTOR

Operation Principle

Most synchronous AC electric motors have output ranges of from 1,200 to 3,600 revolutions per minute. They also have both normal speed and stall-speed torque specifications. The reduction gear trains used in gear motors are designed to reduce the output speed while increasing the torque. The increase in torque is inversely proportional to the reduction in speed.

Gear Toothed wheel that transmits the turning movement of one shaft to another shaft. Gear wheels may be used in pairs or in threes if both shafts are to turn in the same direction. The gear ratio – the ratio of the number of teeth on the two wheels – determines the torque ratio, the turning force on the output shaft compared with the turning force on the input shaft. The ratio of the angular velocities of the shafts is the inverse of the gear ratio.

The common type of gear for parallel shafts is the **spur gear**, with straight teeth parallel to the shaft axis. The **helical gear** has teeth cut along sections of a helix or corkscrew shape; the double form of the helix gear is the most efficient for energy transfer. **Bevel gears**, with tapering teeth set on the base of a cone, are used to connect intersecting shafts.

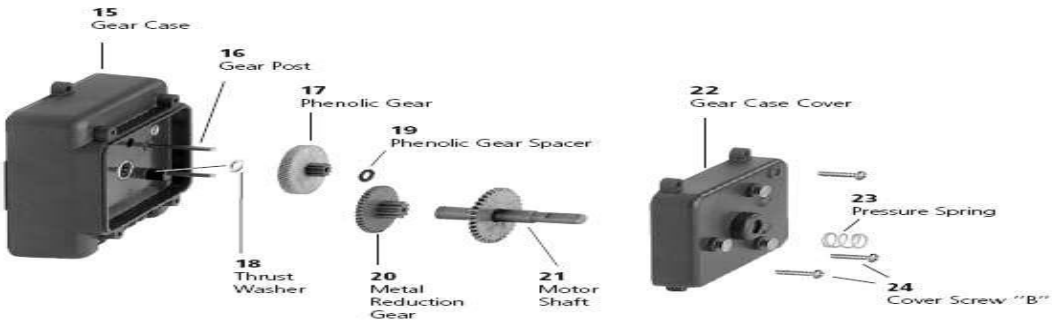

Fig:3.23 Internal Blocks of gear motor

The toothed and interlocking wheels which make up a typical gear movement. Gear ratio is calculated by dividing the number of teeth on the driver gear by the number of teeth on the driven gear (gear ratio = driver/driven); the idler gears are ignored. Idler gears change the direction of rotation but do not affect speed. A high driven to driver ratio (middle) is a speed-reducing ratio.

Speed Reduction

Sometimes the goal of using a gear motor is to reduce the rotating shaft speed of a motor in the device being driven, such as in a small electric clock where the tiny synchronous motor may be spinning at 1,200 rpm but is reduced to one rpm to drive the second hand, and further reduced in the clock mechanism to drive the minute and hour hands. Here the amount of driving force is irrelevant as long as it is sufficient to overcome the frictional effects of the clock mechanism.

Torque Multiplication

Another goal achievable with a gear motor is to use a small motor to generate a very large force albeit at a low speed. These applications include the lifting mechanisms on hospital beds, power recliners, and heavy machine lifts where the great force at low speed is the goal.

Motor Varieties

Most industrial gear motors are AC-powered, fixed-speed devices, although there are fixed-gear-ratio, variable-speed motors that provide a greater degree of control. DC gear motors are used primarily in automotive applications such as power winches on trucks, windshield wiper motors and power seat or power window motors.

Many Applications

What power can openers, garage door openers, stair lifts, rotisserie motors, timer cycle knobs on washing machines, power drills, cake mixers and electromechanical clocks have in common is that they all use various integrations of gear motors to derive a large force from a relatively small electric motor at a manageable speed. In industry, gear motor applications in jacks, cranes, lifts, clamping, robotics, conveyance and mixing are too numerous to count.

3.6.6 SOLAR PLATE:

The **Solar System** is the gravitationally bound system comprising the Sun and the objects that orbit it, either directly or indirectly. Of those objects that orbit the Sun directly, the largest eight are the planet switch the remainder being smaller objects, such as dwarf planets and small Solar System bodies. Of the objects that orbit the Sun indirectly, the moons, two are larger than the smallest planet, Mercury.

Fig :3.24 Solar Panel

The Solar System formed 4.6 billion years ago from the gravitational collapse of a giant interstellar molecular cloud. The vast majority of the system's mass is in the Sun, with the majority of the remaining mass contained in Jupiter. The four smaller inner planets, Mercury, Venus, Earth and Mars, are terrestrial planets, being primarily composed of rock and metal. The four outer planets are giant planets, being substantially more massive than the terrestrials.

The Solar System also contains smaller objects. The asteroid belt, which lies between the orbits of Mars and Jupiter, mostly contains objects composed, like the terrestrial planets, of rock and metal. Beyond Neptune's orbit lie the Kui per belt and scattered disc, which are populations of trans-Neptunian objects composed mostly of ices, and beyond them a newly discovered population of sednoids. Within these populations are several dozen to possibly tens of thousands of objects large enough that they have been rounded by their own gravity.Such objects are categorized as dwarf planets. Identified dwarf planets include the asteroid Ceres and the trans-Neptunian objects Pluto and Eris. In addition to these two regions,variousother small-body populations, including comets, centaurs and interplanetary dust clouds, freely travel between regions.

Six of the planets, at least four of the dwarf planets, and many of the smaller bodies are orbited by natural satellites, usually termed "moons" after the Moon. Each of the outer planets is encircled by planetary rings of dust and other small objects. The distance from Earth to the Sun is 1 astronomical unit (150,000,000 km), or AU. For comparison, the radius of the Sun is 0.0047 AU (700,000 km). Thus, the Sun occupies 0.00001% (10^{-5} %) of the volume of a sphere with a radius the size of Earth's orbit, whereas Earth's volume is roughly one millionth (10^{-6}) that of the Sun. Jupiter, the largest planet, is 5.2 astronomical units (780,000,000 km) from the Sun and has a radius of 71,000 km (0.00047 AU)

With a few exceptions, the farther a planet or belt is from the Sun, the larger the distance between its orbit and the orbit of the next nearer object to the Sun. For example, Venus is approximately 0.33 AU farther out from the Sun than Mercury, whereas Saturn is 4.3 AU out from Jupiter, and Neptune lies 10.5 AU out from Uranus.

Attempts have been made to determine a relationship between these orbital distances (for example, the Titius–Bode law), but no such theory has been accepted. The images at the beginning of this section show the orbits of the various constituents of the Solar System on different scales.

Some Solar System models attempt to convey the relative scales involved in the Solar System on human terms. The largest such scale model, the Sweden Solar System, uses the 110-metre (361-ft) Ericsson Globe in Stockholm as its substitute Sun, and, following the scale, Jupiter is a 7.5-metre (25-foot) sphere at Arlanda International Airport, 40 km away, whereas the farthest current object

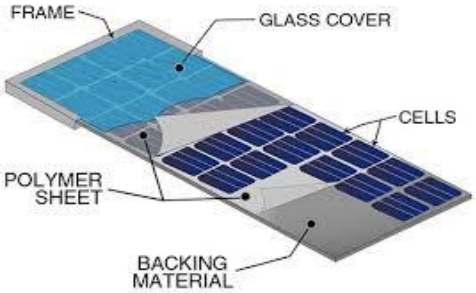

Fig:3.25 Internal Parts Of Solar Panel

The Solar System formed 4.568 billion years ago from the gravitational collapse of a region within a large molecular cloud. This initial cloud was likely several light-years across and probably birthed several stars. As is typical of molecular clouds, this one consisted mostly of hydrogen, with some helium, and small amounts of heavier elements fused by previous generations of stars. As the region that would become the Solar System, known as the pre-solar nebula collapsed, conservation of angular momentum caused it to rotate faster. The centre, where most of the mass collected, became increasingly hotter than the surrounding disc. As the contracting nebula rotated faster, it began to flatten into a protoplanetary disc with a diameter of roughly 200 AU and a hot, dense proto star at the centre The planets formed by accretion from this disc, in which dust and gas gravitationally attracted each other, coalescing to form ever larger bodies.

3.6.7 RELAYS SPDT:

Fig :3.26 SPDT relay

Overview OF Relays

A relay is an electrically operated switch used to isolate one electrical circuit from another. In its simplest form, a relay consists of a coil used as an electromagnet to open and close switch contacts. Since the two circuits are isolated from one another, a lower voltage circuit can be used to trip a relay, which will control a separate circuit that requires a higher voltage or amperage. Relays can be found in early telephone exchange equipment, in industrial control circuits, in car audio systems, in automobiles, on water pumps, in high-power audio amplifiers and as protection devices.

Relay Switch Contacts

The switch contacts on a relay can be "normally open" (NO) or "normally closed" (NC)--that is, when the coil is at rest and not energized (no current flowing through it), the switch contacts are given the designation of being NO or NC. In an open circuit, no current flows, such as a wall light switch in your home in a position that the light is off. In a closed circuit, metal switch contacts touch each other to complete a circuit, and current flows, similar to turning a light switch to the "on" position. In the accompanying schematic diagram, points A and B connect to the coil. Points C and D connect to the switch. which attracts a lever in the switch, causing it to make or break contact in the circuit at points C and D . The switch contacts remain in this state until you remove the voltage to the coil. Relays come in different switch configurations. The diagram shows a "single pole single throw" configuration, referred to as SPST. This is similar to a wall light switch in your home. With a single "throw" of the switch, you close the circuit.

The Single Pole Double Throw Relay:

A single pole double throw (SPDT) relay configuration switches one common pole to two other poles, flipping between them. As shown in the schematic diagram, the common point E completes a circuit with C when the relay coil is at rest, that is, no voltage is applied to it.

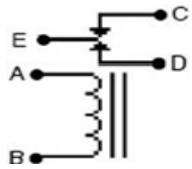

Fig:3.27 configuration of SPDT relay

This circuit is "closed." A gap between the contacts of point E and D creates an "open" circuit. When you apply power to the coil, a metal level is pulled down, closing the circuit between points E and D and opening the circuit between E and C. A single pole double throw relay can be used to alternate which circuit a voltage or signal will be sent to.

Why do we want to use a relay and do we really need to?

Anytime you want to switch a device which draws more current than is provided by an output of a switch or component you'll need to use a relay. The coil of an **SPDT** or an **SPST** relay that we most commonly use draws very little current (less than 200 milliamps) and the amount of current that you can pass through a relay's common, normally closed, and normally open contacts will handle up to 30 or 40 amps. This allows you to switch devices such as headlights, parking lights, horns, etc., with low amperage outputs such as those found on keyless entry and alarm systems, and other components. In some cases you may need to switch multiple things at the same time using one output.

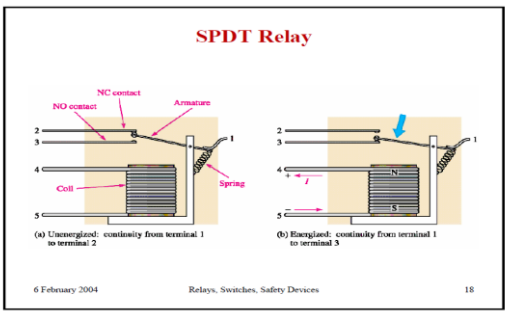

Fig:3.28 SPDT relay

3.7 SOFTWARE REQUIRED:

- Arduino Compiler
- MC Programming Language: C

ARDUINO IDE SOFTWARE:

In this section, we will learn in easy steps, how to set up the Arduino IDE on our computer and prepare the board to receive the program via USB cable.

Step 1: − First we must have our Arduino board (we can choose our favorite board) and a USB cable. In case we use Arduino UNO, Arduino Duemilanove, Nano, Arduino Mega 2560, or Diecimila, we will need a standard USB cable (A plug to B plug), the kind we would connect to a USB printer as shown in the following image.

Figure:3.29 USB Cable

In case we use Arduino Nano, we will need an A to Mini-B cable instead as shown in the following image.

Step 2: – Download Arduino IDE Software

We can get different versions of Arduino IDE from the Download page on the Arduino Official website. We must select software, which is compatible with operating system (Windows, IOS, or Linux). After file download is complete, unzip the file.

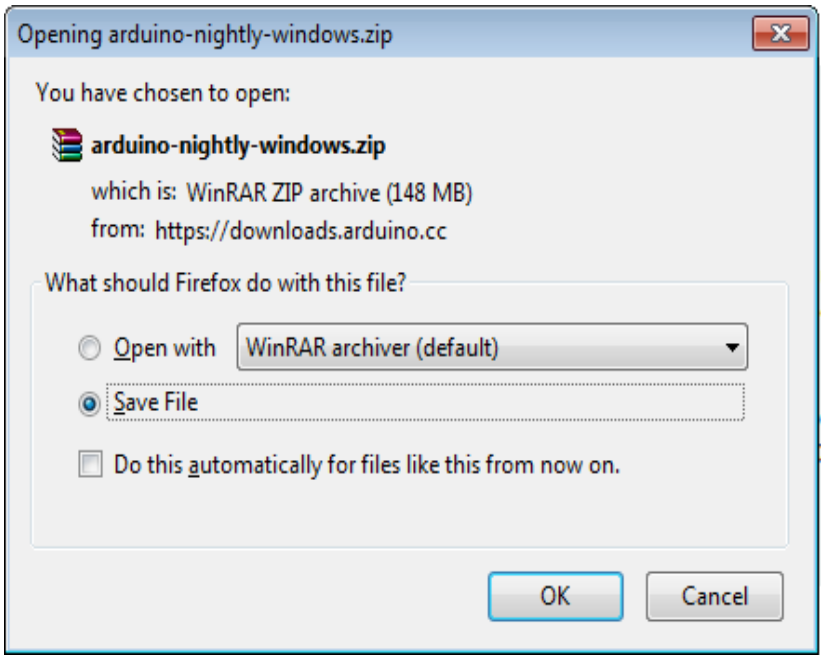

Fig :3.30 Download Arduino IDE Software

Step 3: – Power up board

The Arduino Uno, Mega, Duemilanove and Arduino Nano automatically draw power from either, the USB connection to the computer or an external power supply. If we are using an Arduino Diecimila, we have to make sure that the board is configured to draw power from the USB connection. The power source is selected with a jumper, a small piece of plastic that fits onto two of the three pins between the USB and power jacks. Check that it is on the two pins closest to the USB port.

Connect the Arduino board to computer using the USB cable. The green power LED (labeled PWR) should glow.

Step 4: – Launch Arduino IDE

After our Arduino IDE software is downloaded, we need to unzip the folder. Inside the folder, we can find the application icon with an infinity label (application.exe). Double-click the icon to start the IDE.

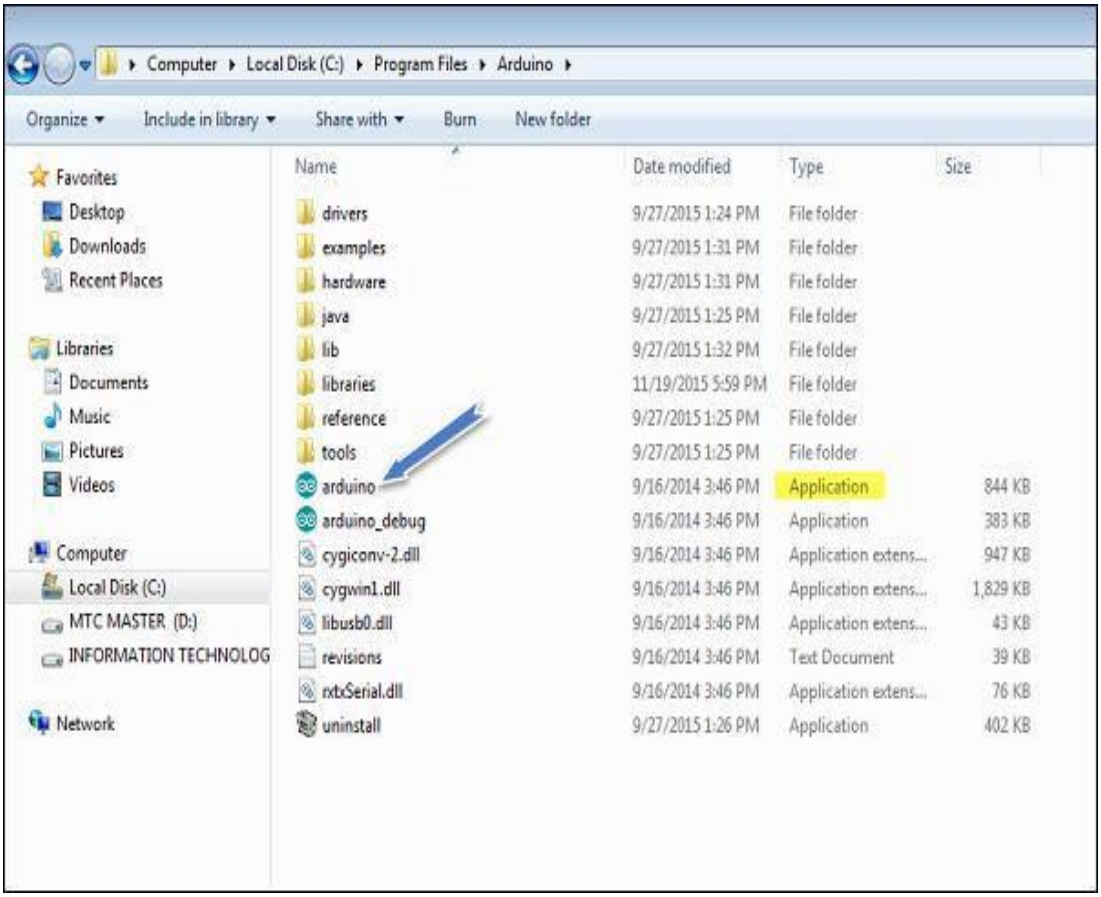

Fig :3.31 Launch Arduino IDE

Step 5: − Open first project

Once the software starts, we have two options −

- Create a new project.
- Open an existing project example.

To create a new project, select File → **New**.

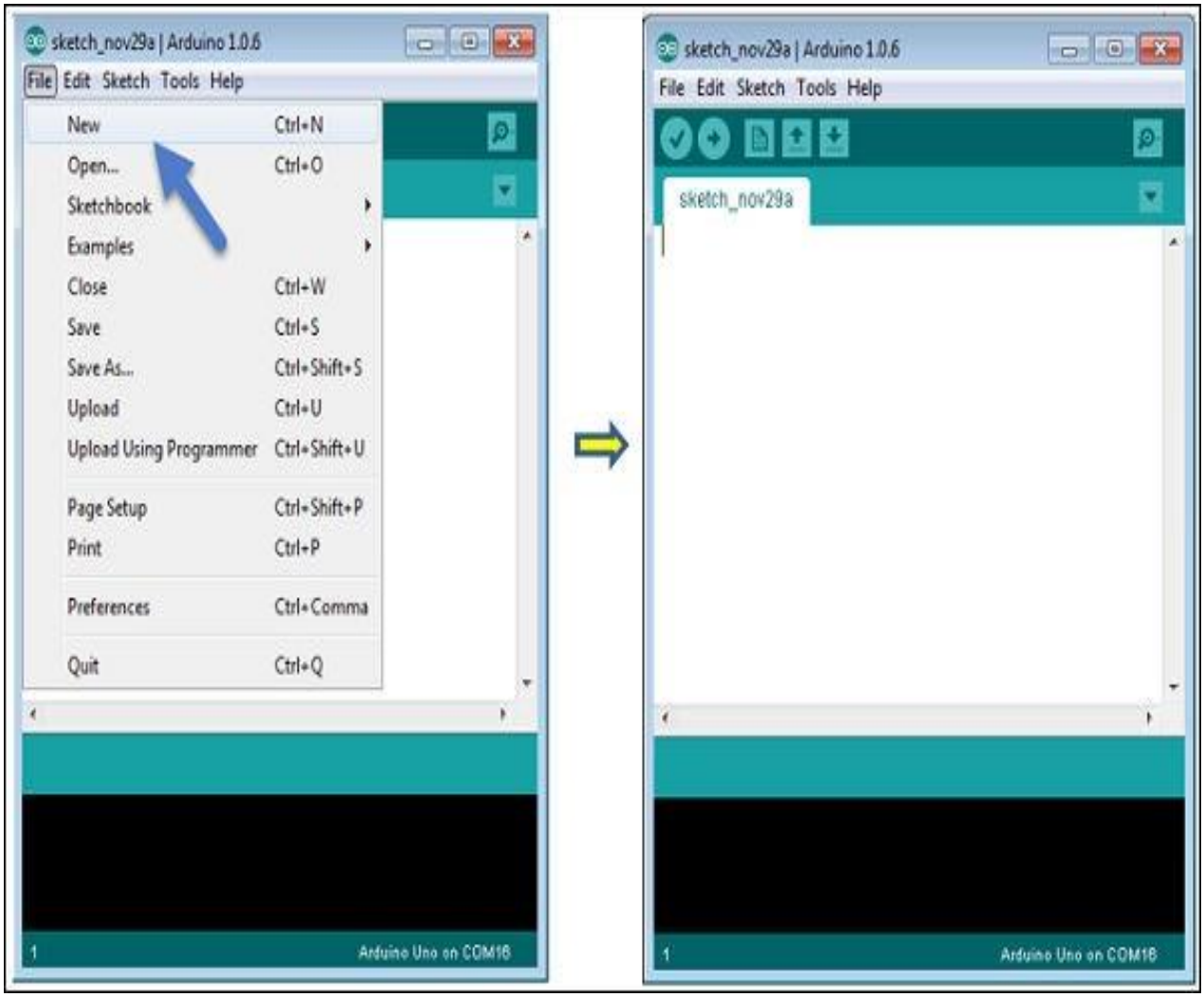

Fig :3.32 Open first project

To open an existing project example, select File → Example → Basics → Blink.

The Arduino Uno, Mega, Duemilanove and Arduino Nano automatically draw power from either, the USB connection to the computer or an external power supply. If we are using an Arduino Diecimila, we have to make sure that the board is configured to draw power from the USB connection.

The power source is selected with a jumper, a small piece of plastic that fits onto two of the three pins between the USB and power jacks. Check that it is on the two pins closest to the USB port.

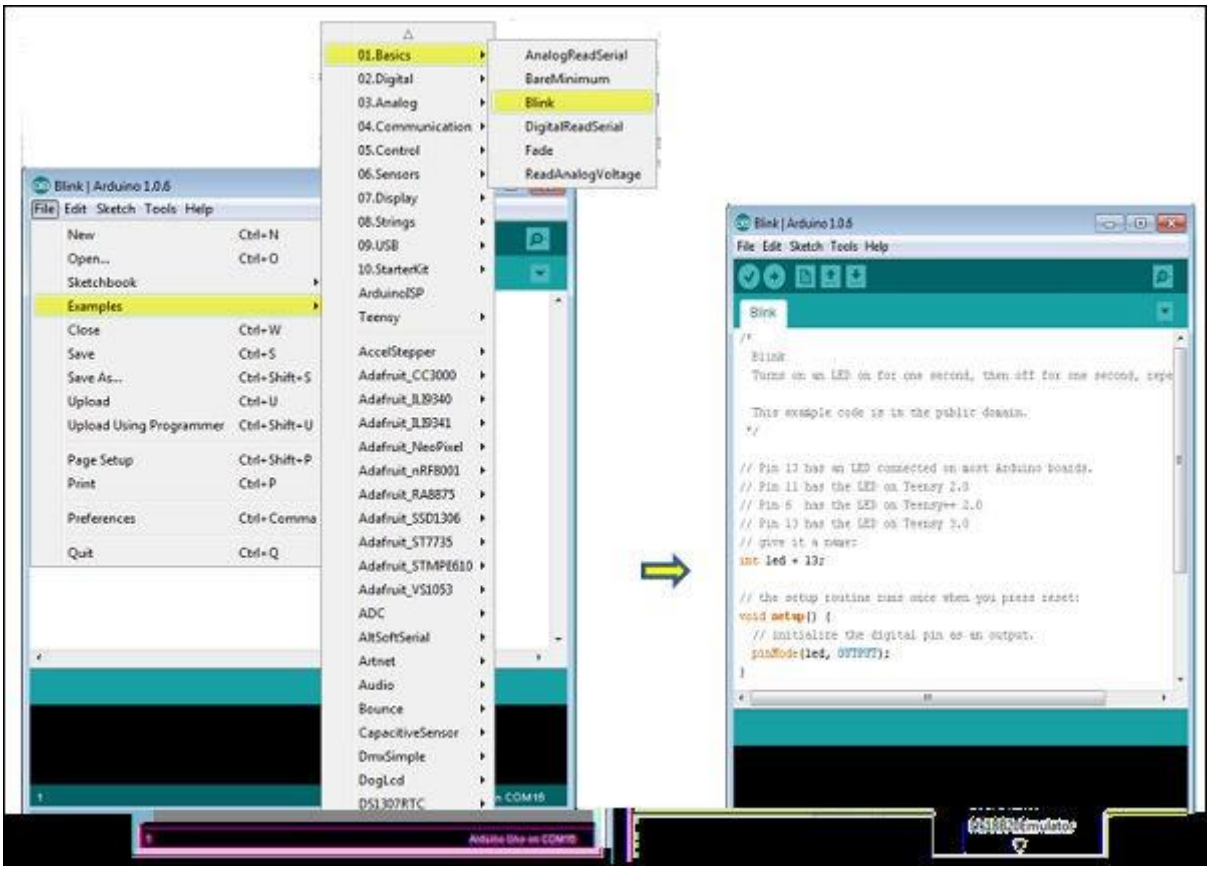

Fig :3.33 Open an existing project example

Here, we are selecting just one of the examples with the name **Blink**. It turns the LED on and off with some time delay. We can select any other example from the list.

Step 6: – Select Arduino board

To avoid any error while uploading program to the board, we must select the correct Arduino board name, which matches with the board connected to our computer.

Go to Tools → Board and select board.

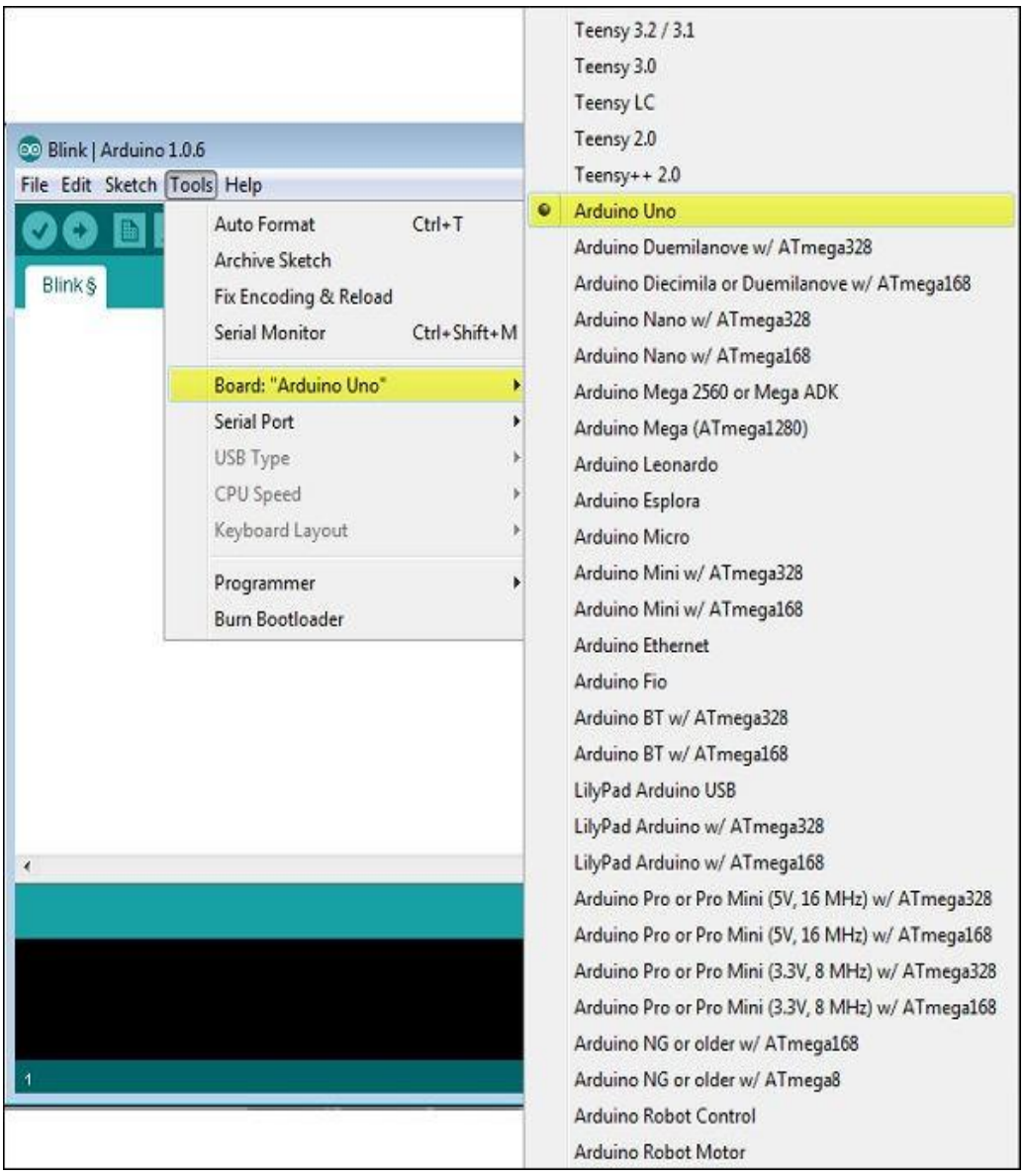

Figure :3.34 Select Arduino board

Here, we have selected Arduino Uno board according to tutorial, but we must select the name matching the board that we are using.

Step 7: – Select serial port

Select the serial device of the Arduino board. Go to **Tools → Serial Port** menu. This is likely to be COM3 or higher (COM1 and COM2 are usually reserved for hardware serial ports).

To find out, we can disconnect our Arduino board and re-open the menu, the entry that disappears should be of the Arduino board. Reconnect the board and select that serial port.

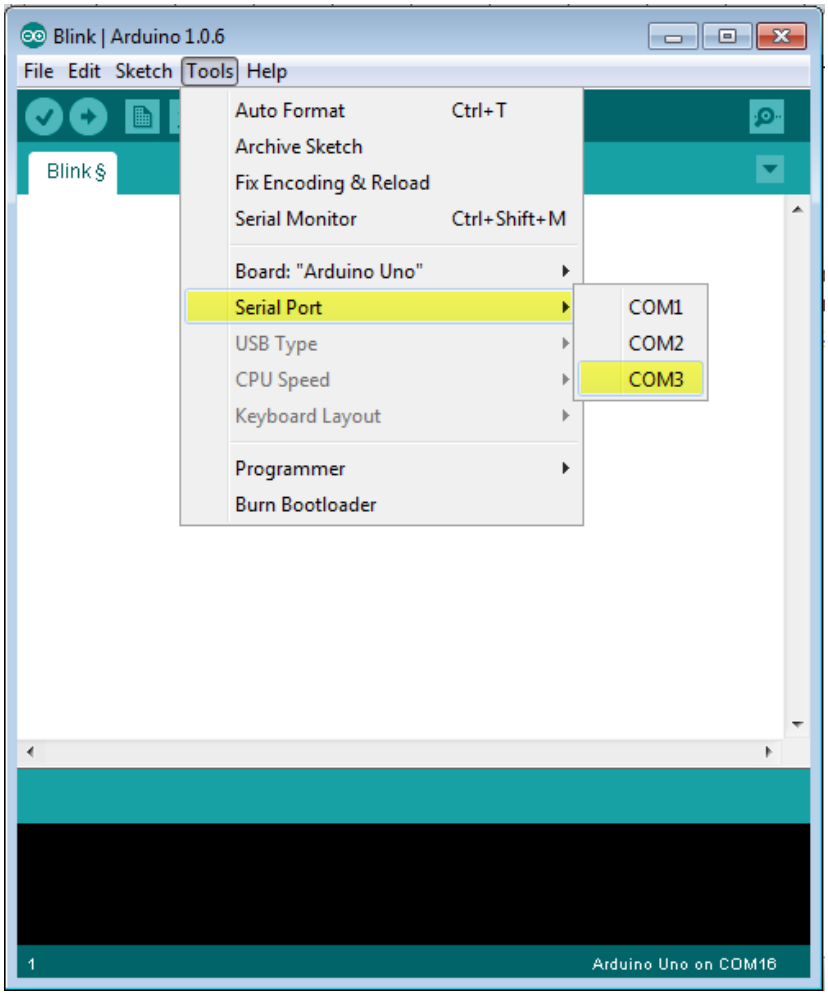

Fig :3.35 Select serial port

Step 8: − Upload the program to board

Before explaining how we can upload program to the board, we must demonstrate the function of each symbol appearing in the Arduino IDE toolbar.

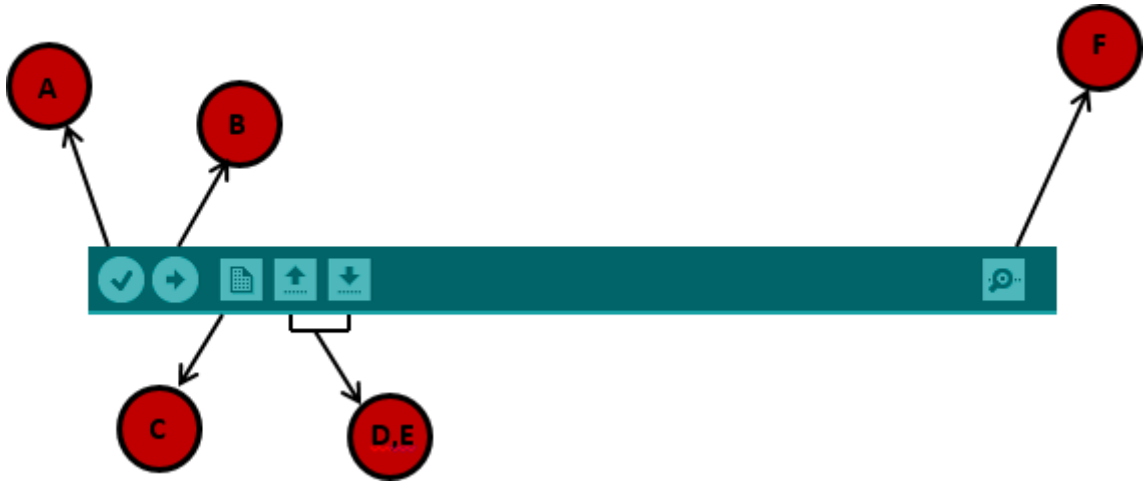

Fig :3.36 upload the program to board

A − Used to check if there is any compilation error.

B − Used to upload a program to the Arduino board.

C − Shortcut used to create a new sketch.

D − Used to directly open one of the example sketch.

E − Used to save our sketch.

F − Serial monitor used to receive serial data from the board and send the serial data to the board.

Now, simply click the "Upload" button in the environment. Wait a few seconds; we will see the RX and TX LEDs on the board, flashing. If the upload is successful, the message "Done uploading" will appear in the status bar.

EMBEDDED C:

Embedded C Programming is the soul of the processor functioning inside each and every embedded system we come across in our daily life, such as mobile phone, washing machine, and digital camera. Each processor is associated with embedded software. The first and foremost thing is the embedded software that decides functioning of the embedded system. Embedded C language is most frequently used to program the microcontroller.

Earlier, many embedded applications were developed using assembly level programming. However, they did not provide portability. This disadvantage was overcome by the advent of various high level languages like C, Pascal, and COBOL.

However, it was the C language that got extensive acceptance for embedded systems, and it continues to do so. The C code written is more reliable, scalable, and portable; and in fact, much easier to understand.

About C Language:

C language was developed by Dennis Ritchie in 1969. It is a collection of one or more functions, and every function is a collection of statements performing a specific task.

C language is a middle-level language as it supports high-level applications and low-level applications. Before going into the details of embedded C programming, we should know about RAM memory organization.

Salient features of the language:

- C language is software designed with different keywords, data types, variables, constants, etc.
- Embedded C is a generic term given to a programming language written in C, which is associated with particular hardware architecture.
- The microcontroller 8051 #include<reg51.h> is used.

The embedded system designers must know about the hardware architecture to write programs. These programs play prominent role in monitoring and controlling external devices.

They also directly operate and use the internal architecture of the microcontroller, such as interrupt handling, timers, serial communication and other available features.

The Structure of an Embedded C Program:

- comments
- preprocessor directives
- global variables
- main() function

{

- local variables
- statements
- ……..
- ……..

}

- fun(1)

{

- local variables
- statements
- ……..
- ……..

}

Comments: In embedded C programming language, we can place comments in our code which helps the reader to understand the code easily.

C = a+b; /* add two variables whose value is stored in another variable C*/

Preprocessor directives:

All the functions of the embedded C software are included in the preprocessor library like “#includes<reg51.h>, #defines”. These functions are executed at the time of running the program.

Main () function:

The execution of a program starts with the main function. Every program uses only one main () function.

Advantages of embedded C program:

- Its takes less time to develop application program.
- It reduces complexity of the program.
- It is easy to verify and understand.
- It is portable in nature from one controller to another.

CHAPTER 4

RESULTS AND DISCUSSIONS

The solar power multi purpose agriculture robot using android application is a game changer in the agriculture fields. The outcomes of the project are saving of water seeds and reduction in the man power for the agriculture purpose.

The various operations performed by solar power based multipurpose agriculture robot are ploughing, seed dispensing, water sprinkling.

- When the robot receives F,B,R & L commands from the mobile app, it will start moving in the corresponding directions.

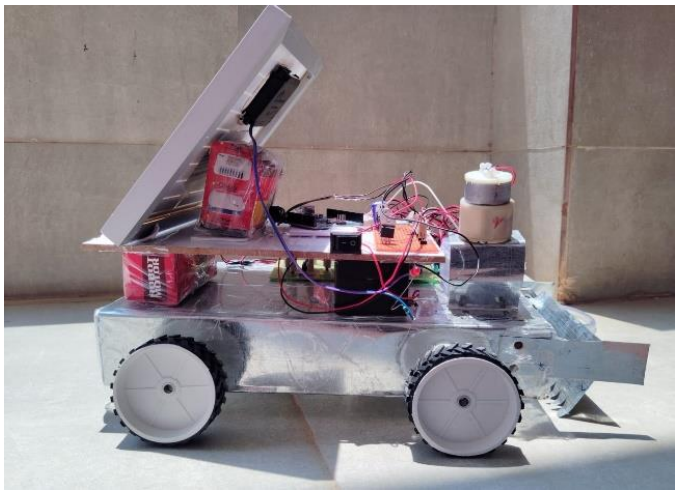

Fig : 4.1 solar power based multipurpose agriculture robot

- The robot will start ploughing, when it receives command 1 from the mobile app.

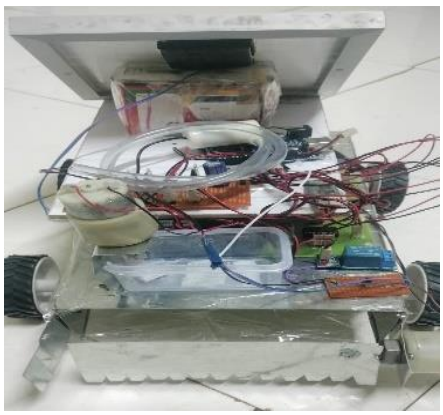

Fig 4.2 : ploughing operation

- The robot will stop ploughing, when it receives command 2 from the mobile app.
- The robot will start seed dispenseing, when it receives command 3 from the mobile app.

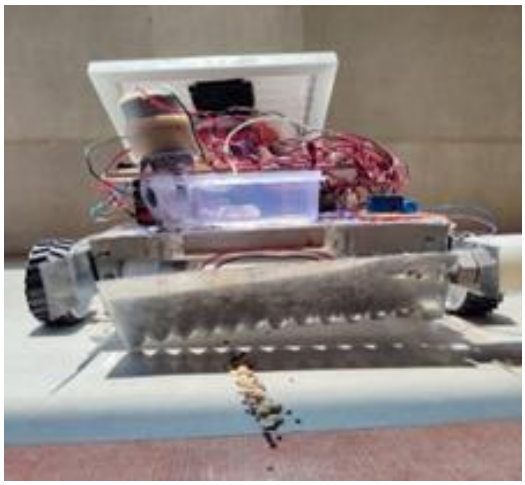

Fig 4.3 : Seed dispensing operation

- The robot will stop seed dispenseing, when it receives command 4 from the mobile app.
- The robot will start water sprinkling, when it receives command 5 from the mobile app.

Fig 4.4 : water sprinkling operation

- The robot will stop water sprinkling, when it receives command 6 from the mobile app.

4.1 ADVANTAGES

- Low cost
- Easy construction
- Easy to operate
- Solar energy is a renewable energy and the battery is charged continuously
- Highly reliable
- No need of skilled operators to operate this system

4.2 APPLICATIONS

- ploughing
- seed dispensing
- water sprinkling

CHAPTER 5

CONCLUSION AND FUTURE SCOPE

5.1 CONCLUSION

Intended objectives were successfully achieved in the prototype model developed. The developed product is easy to use, economical and does not require any special training.

Hence, we have developed an solar power based multipurpose agriculture robot which is used for overall functioning of the farm with least use of manpower. Nowadays, the people involved in agricultural sector are decreased because of the influence of the modernisation and intervention of IT sector. The designed system can do the operations such as ploughing, seed dispensing and water sprinkling with minimal involvement of manpower. This project can be used to mange the farm in a modern way. Also, this is more eco-friendly tool as it is run by solar power.

5.2 FUTURE SCOPE :

A solar-based multipurpose agriculture robot offers numerous possibilities for enhancing efficiency, productivity, and sustainability in farming practices. In future, by adding few sensors like soil moisture & ultrasonic sensors for extreme minimizing the human supervision. By using soil moisture sensor we can detect the soil type. By Using the ultrasonic sensor the robot can change the direction when the obstacle ahead.

REFERENCES

[1] Shubo Liu, Liqing Guo, Heather Webb, Xiao Ya1, And Xiao Chang "Internet of Things Monitoring System of ModernEco-Agriculture Based on Cloud Computing" IEEE transaction on IoT Monitoring System of Modern Eco-Agriculture Based on Cloud ComputingApril 2019

[2] K Durga Sowjanya1, R Sindhu1, M Parijatham1, K Srikanth1, P Bhargav "Multipurpose Autonomous Agricultural Robot" International Conference on Electronics, Communication and Aerospace Technology ICECA 2017

[3] Fernando Alfredo AuatCheein ; Ricardo Carelli "Agricultural Robotics:Unmanned Robotic Service Units in Agricultural Tasks" IEEE Sept. 2013. Vol 7. pp 48-58.

[4] Sanku Kumar Roy ; Arijit Roy ; Sudip Misra ; Raghuwanshi ; Mohammad S. Obaidat "AID: A prototype for Agricultural Intrusion Detection usingWireless Sensor Network" IEEE :10 September 2015. Vol 32. pp 703-714.

[5] Aishwarya.B.V ; Archana.G ; C. Umayal "Agriculture robotic vehicle-based pesticide sprayer with efficiency optimization" 17 December 2015. Vol 12. pp 324-329.

[6] Sarita Gupta ; Ajay Mudgil ; Prashant Bhardwaj ; Mahendra Gupta "Design and Development of Automatic Fire Alert System" 26 October 2017.

[7] Ram Krishna Jha ; Santosh Kumar ; Kireet Joshi ; Rajneesh Pandey "Field monitoring using IOT in agriculture" IEEE 23 April 2018. pp 1417-1420.

[8] Yunseop Kim; Robert G. Evans ; William M. Iversen "Remote Sensing and Control of an Irrigation System" IEEE Transactions on Instrumentation and Measurement.-July 2008 Vol 57. pp 7-11